Label Printer

iF4

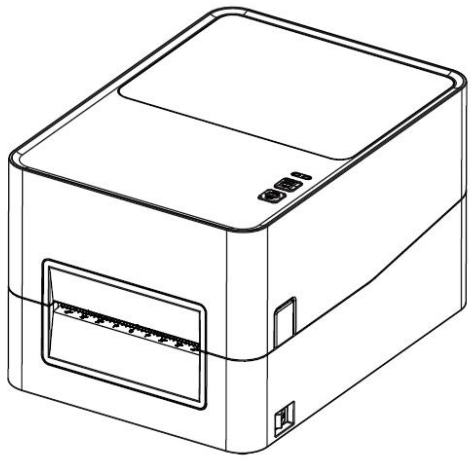

User Manual

V1.1

Contents

Important Safety Instructions IV
Chapter 1 Introduction 1
1.1 Packing List 1
1.2 Appearance and Components 2
1.3 Dimension 4
Chapter 2 Specifications 5
Chapter 3 Usage & Installation 8
3.1 Media Loading 8
3.2 Power Connection 13
3.3 Interface Cable Connection 13
3.5 Operation Panel 14
3.6 Basic Operation 15
Chapter 4 Interface 17
4.1 USB Interface 17
4.2 Ethernet Port 17
Chapter 5 Maintenance & Adjustment 18
5.1 Cleaning Thermal Print Head 18
5.2 Cleaning Sensor, Platen and Paper Path 19
Chapter 6 Printer Utility Tool Instructions 20
6.1 Installation Preparation 20
6.2 Usage 20
Chapter 7 Windows Driver Instructions 29
7.1 Introduction 29
7.2 Windows Driver Preparation 29
7.3 Driver Installation 30
7.4 Usage 33
7.5 Uninstall Driver 44

Change Record

REV.	Date	Summary of Changes	
		Item	Description
1.0	2024.10.09	-	First Edition.
1.1	2026.07.29	3.5 (P14)	Added label type switching function description.
		3.6.3 (P15)	Revised the description for the manual calibration function.
		7.4.1 (P38)	Added media handling settings description.

Statement

This manual content may be altered without permission, and we reserve the rights to make changes without notice in technology, spare parts, hardware and software of the products. If more information is needed about the products, please contact us. Without any written permission from the company, any section of this manual is prohibited to be copied or transferred in any form.

Copyright

Printed in China

1.1 Version

WARNING

Warning: The print head is a heating part. Do not touch the print head and surrounding parts during and just after printing.

Warning: Do not touch the print head and connection plug-in to avoid damage to the print head due to static electricity.

Special Reminder

Due to continuous improvement of the products, the specifications, accessories and procedures described in the manual are based on actual machines. And it may be changed without prior notice.

Important Safety Instructions

Before using the printer, please read carefully the following safety consideration.

1.Safety warning

Warning——It must be observed to avoid injury to human body and damage to equipment.

Note——It gives important information and tips for printer operation.

2.Instructions

Warning: Violation of the following items may result in serious casualties.

1) Do not insert several plugs into a multi hole power outlet at the same time.

- This can cause overheating and fire.
- If the plug is wet or dirty, please dry or wipe it before use.
- If the plug does not match the power outlet, do not plug it in.
- Only standardized multi hole power sockets can be used.

2) You can only use the adapters supplied in this package.

- Using other adapters is dangerous.

3) Do not pull the plug by pulling on the connecting wire.

- This can damage the connecting wires, causing a fire or machine malfunction.

4) Do not plug or unplug the power plug when your hands are wet.

- This can cause an electric shock.

5) Do not bend the connecting wire forcefully or place it under a heavy object.

- Damage to the connecting line may cause a fire.

Note: Violation of the following items may cause minor injury or damage to the equipment.

1) If you observe a strange smoke, odour or noise from the printer, unplug it before taking following measures.

• Switch off the printer and unplug the set from the mains.

• After the smoke disappears, call the dealer for repairs.

2) Install the printer on the stable surface.

• If the printer falls down, it may be broken and you may hurt yourself.

3) Use only approved accessories and do not attempt to disassemble, repair, or modify yourself.

• If you need these services, please contact your dealer by phone.

4) Do not let water or other foreign objects drop into the printer.

• If such an event occurs, please shut down and unplug Printer. Then contact the dealer.

5) Do not use the printer when it is out of order. This can cause a fire or an electrocution.

• Switch off and unplug the printer before calling your dealer.

6) Other considerations:

• Leave enough space around printer for operation and maintenance.

• Do not expose the printer to high temperatures, direct sunlight or dust.

• Do not use and store this product in places with high temperatures, high humidity, and severe pollution.

• Avoid placing this product in a place with vibration and shock.

• Connect the power adapter of this product to a suitable grounded socket to avoid using the same socket as large motors or devices that can cause fluctuations in power supply voltage.

• Switch off the printer POWER supply when it’s not in use for a long time.

• To ensure print quality and product life, it is recommended to use recommended or equivalent quality paper.

• Please switch off the POWER supply when connect/disconnect all the ports or it will cause damage to the printer control circuit.

• Keep this User Manual in a place which is easily accessible at all times.

3.Other precautions

Although we have been very careful in the preparation of this manual, some errors or omissions are inevitable. Our company is not responsible for any losses caused by anyone using the information in this manual. Our company and its subsidiaries shall not be legally liable for any damage, loss, expense, or expense caused by user or third party's failure to follow or ignore the operation and maintenance information and instructions provided by our company, resulting in product damage, malfunction, or misuse, as well as unauthorized modification, repair, or modification of the product. We do not assume any legal liability for damage or problems caused by the use of counterfeit our options, components, or unauthorized products.

4.WEEE (Waste Electrical and Electric Equipment)



This mark shown on the product or its literature indicates that the corresponding item should not be discarded at the end of its working life with other household waste. To prevent possible harm to the environment or human health from uncontrolled waste disposal, please separate marked items from other types of waste and recycle them responsibly to promote the sustained reuse of material resources. Household users should contact either the retailer where they purchased this product, or their local government office for details of where and how they can conduct environmentally safe recycling of such items. Commercial users should contact their suppliers and check the terms and conditions of purchase contracts. This product should not be combined with other commercial waste for disposal.



Warning: Operation of this equipment in a residential environment could cause radio interference.

Chapter 1 Introduction

1.1 Packing List

Note:

1.Unpack the printer and keep the packing material in case you need to ship the printer in the future.

2.Make sure you own all parts as follows, if not, do contact the seller.

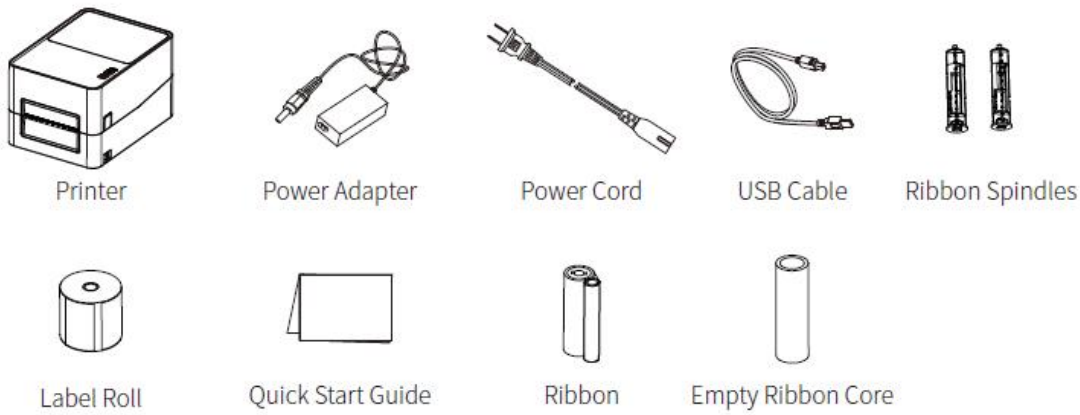

Figure 1-1

Note: The packing items are based on the order.

1.2 Appearance and Components

- **Front View**

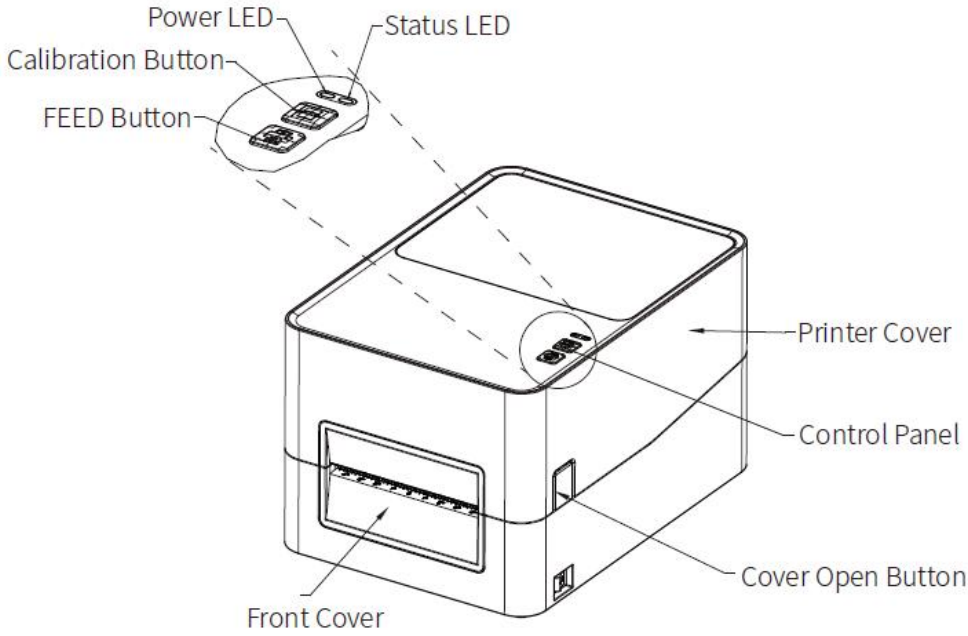

- **Rear View**

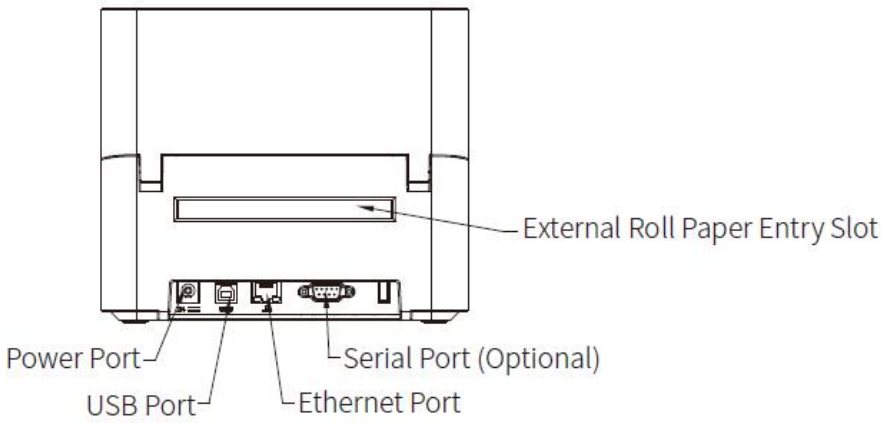

- **Inside View**

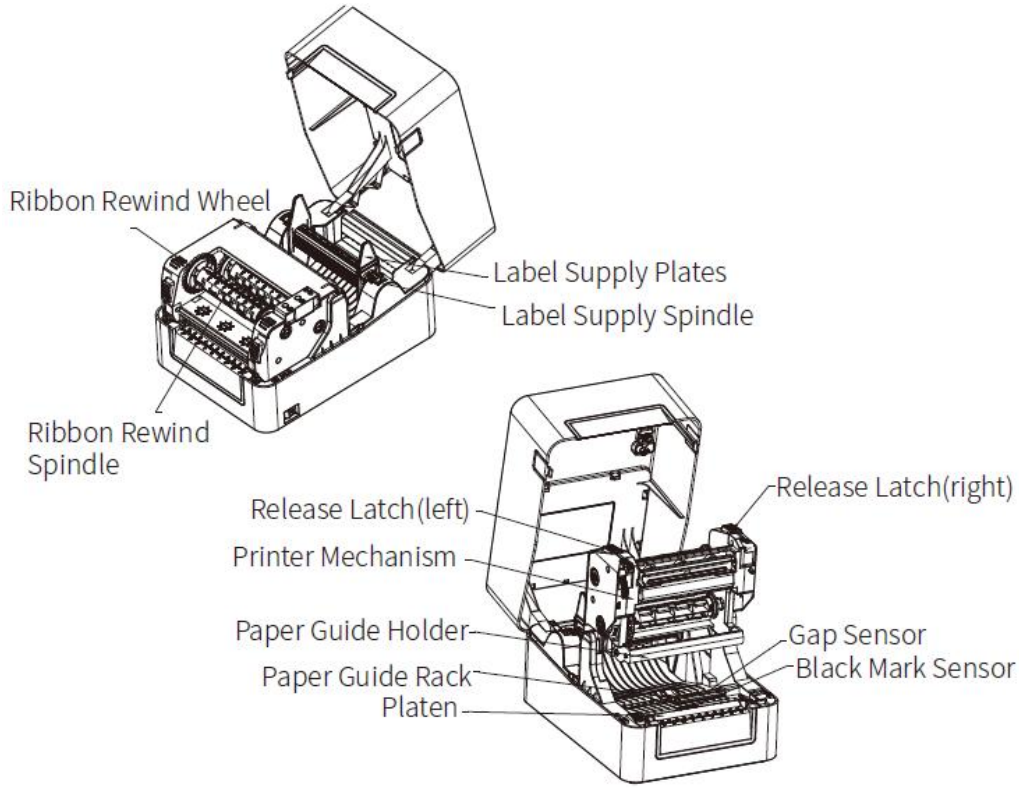

Description of some components:

- **Power LED and Status LED**

The power LED is a single color indicator, and the status LED is a three-color indicator, which inform the user of the printer status through different combinations, as described in Section 3.5 Operation Panel.

- **External Roll Paper Entry Slot**

IF4 supports an external large paper roll. The external large paper roll feeds paper through the external roll paper entry slot.

- **Release Latch**

Press the left and right release latch with both hands simultaneously and lift the printing head.

- **Media Guides**

Pass the paper through media guides and adjust media guides according to the paper width.

1.3 Dimension

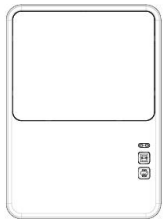

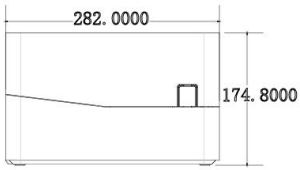

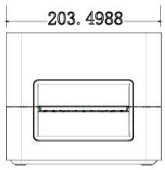

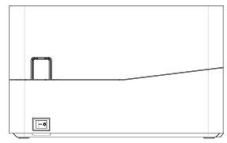

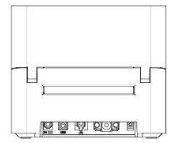

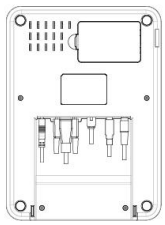

Chapter 2 Specifications

Table 2-1 Specifications

（1/3）

Item		Parameters
Printing	Printing Method	Thermal Transfer
	Resolution	203 dpi/300 dpi
	Printing Width	108mm (203 dpi)/106mm (300 dpi)
	Printing Speed	6 ips (203 dpi), 4 ips (300 dpi)
	Print Length	51"(1200mm)
CPU		32-bit RISC CPU
Memory	RAM	64MB
	Flash	128MB
Detection	Sensors	Out-of-paper Sensor, Gap Sensor, Ribbon Sensor, Black Mark Sensor, Cover Opening Sensor
Supplies/Paper roll	Type	Black mark label, punched hole label, folding or rolling die cutting label
	Label Width	20mm– 112mm
	Label Height	8mm– 250mm
	Label Thickness	60mm– 200mm
	Roll Paper Diameter	Max. 127mm
	Core Diameter	0.5inches(12.7mm),1inch(25.4mm),1.5inches(38mm)
Ribbon	Type	Wax, Wax/Resin, Resin
	Width	40mm– 110mm
	Length	Max. 300m
	Core Diameter	0.5/1inches
Emulator/Programming Language		ZPL, TSPL, DPL, EPL

Table 2-1 Specifications (continued)

（2/3）

Item		Parameters
Software	Label Design	iDPRT BarTender Ultralite
	Driver	Windows7,8,10,11Server 2012/2016/2018,Seagull Driver
Resident Fonts	Bitmap Fonts	8, 12, 16, 24, 32 and OCR A & B 90°, 180°, 270° rotatable. 10 times maximum expandable in horizontal and vertical directions.
	TTF Fonts	Monotype CG Triumvirate™ scalable true type font, Simplified Chinese
Code Pages		DOS437,720,737,755,775,850,852,855,856,857,858,860,862,863,864, 865,866, Windows 1250,1251,1252,1253,1254, 1255.1256,1257.1258, ISO8859-1,-2,-3,-4,-5,-6,-8,-9,-15
Barcodes	1D	Code 39, Code 93, Code 128UCC, Code 128 subset A, B, C, Codabar, Interleave 2 of 5, EAN-8, EAN-13, EAN-128, UPC-A, UPC-E, EAN and UPC 2 (5) digits add-on, MSI, PLESSEY, POSTNET, RSS-Stacked, GS1 DataBar, Code 11
	2D	PDF417, Maxicode, DataMatrix, QR Code, Aztec
Interfaces	Standard	USB, Ethernet
	Optional	Bluetooth 4.0/BLE,WiFi
User Interface		Monochrome status LED: Power LED Three-color status LED: status LED Control key: Feed, Calibration
Power Adapter		switching power adapter Input: AC100-240V, 50/60Hz Output: DC 24V/2A
Environment	Operation	41℉(5℃)-104℉(40℃), 30%-85%(non-condensing)
	Storage	-4℉(-20℃)-122℉(50℃), 10%-90%(non-condensing)

Table 2-1 Specifications (continued)

（3/3）

Item	Parameters
Physical Characteristics	Dimension(L*H*W)
	Weight
Options & Accessories	External 8-inch label roll holder Peeler module, cutter module Label Peeler Module
Approvals/Certification	CCC,CE,CB,FCC

Chapter 3 Usage & Installation

3.1 Media Loading

3.1.1 Opening the Print Cover

Press the left and right cover open lever with both hands simultaneously and lift the print cover.

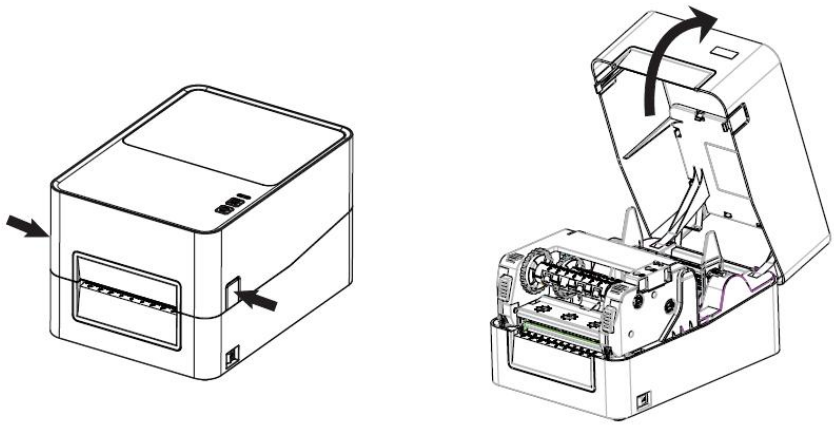

3.1.2 Opening the Printer Mechanism

Press the left and right release latch with both hands simultaneously and lift the printer mechanism.

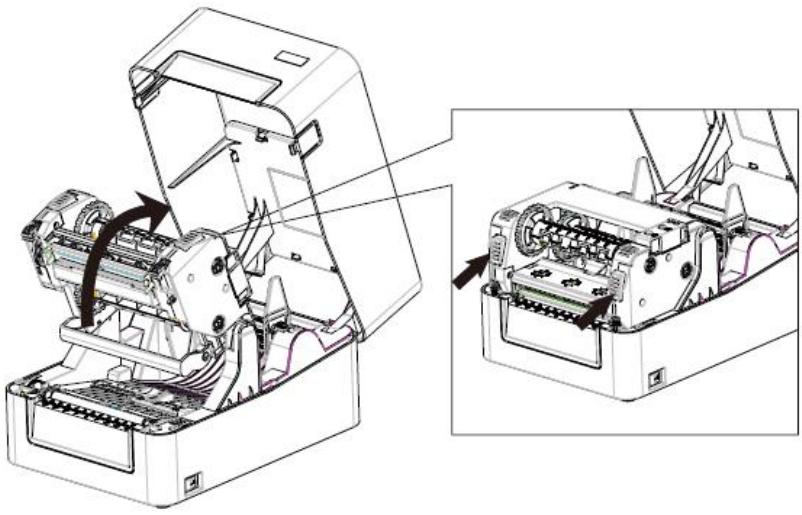

3.1.3 Roll and Ribbon Loading

Lift the top cover. According to the paper roll size, adjust the direction of paper roll shaft. Put the paper roll into the paper roll shaft. This printer can support two kinds of paper roll. There are instruction on the paper roll shaft.

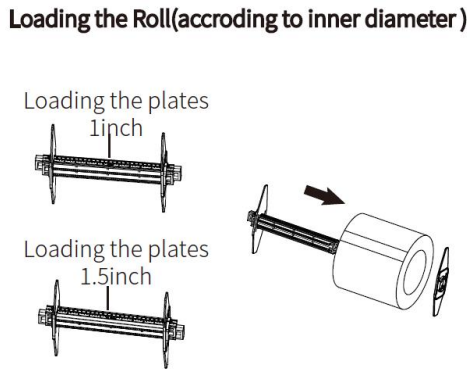

2）Load the roll assembly into the printer from top to bottom.

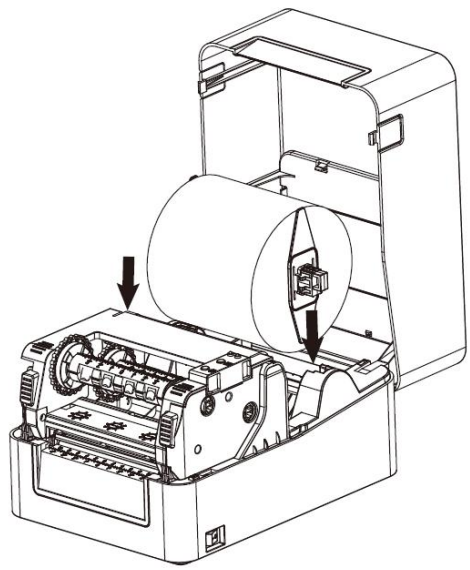

3）Release and lift the printer mechanism. Then pass the labels through label guides and adjust label guides to label's width.

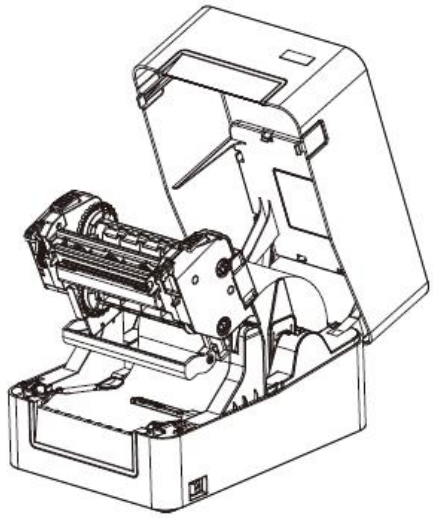

4. After putting the ribbon into spindle, insert the right part of supply module into supply wheel, and then insert the left part into the groove below.

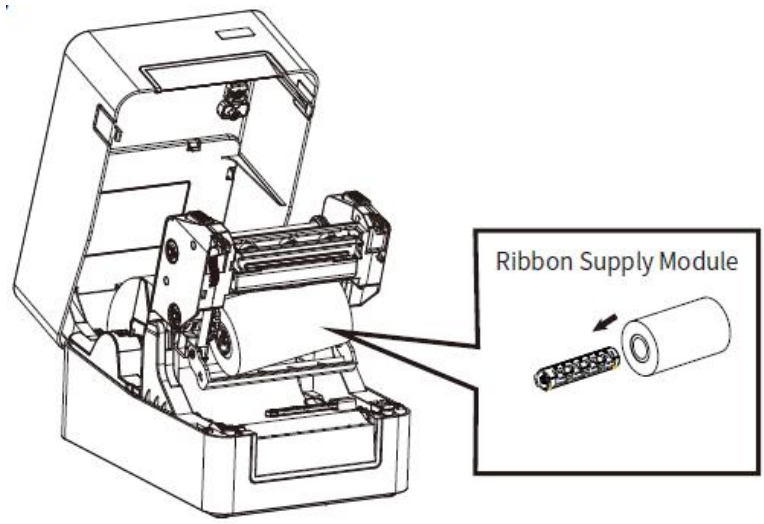

5. After putting empty ribbon core into spindle, insert the right part of rewind module into rewind wheel, and then insert the left part into the groove above.

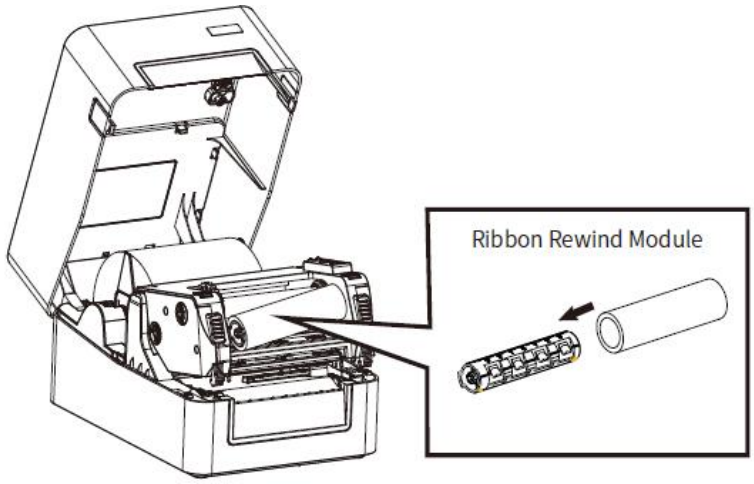

6. Pull up the ribbon and stick it to the empty ribbon core. Wind the core 2~3 circles until the ribbon is pulled tightly.

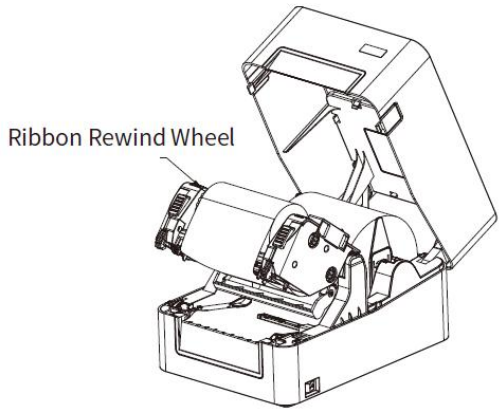

7. Fix the mechanism and then close the cover.

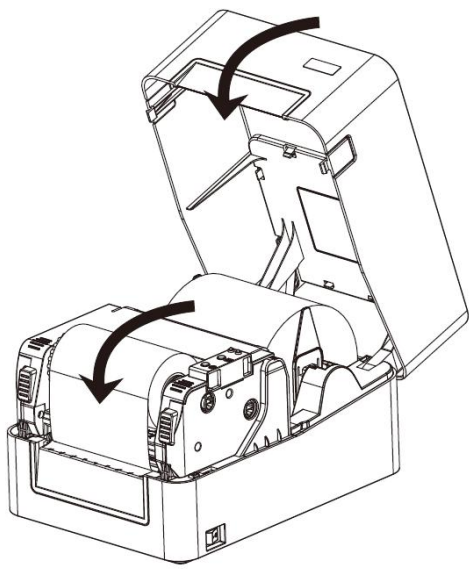

3.1.4 External Paper Roll Loading

1）Assemble the external paper roll bracket group and connect it to the bottom of the printer.

2）Fix the paper roll on the bracket.

3）Feed the paper from the external roll paper entry slot into the printer.

4）Lift the printer mechanism. Pass the paper through paper guides and adjust paper guides according to the paper width.

5）Press down the printing group and fix it, then close the printer cover. (refer to the installation instructions for the built-in paper roll for specific instructions).

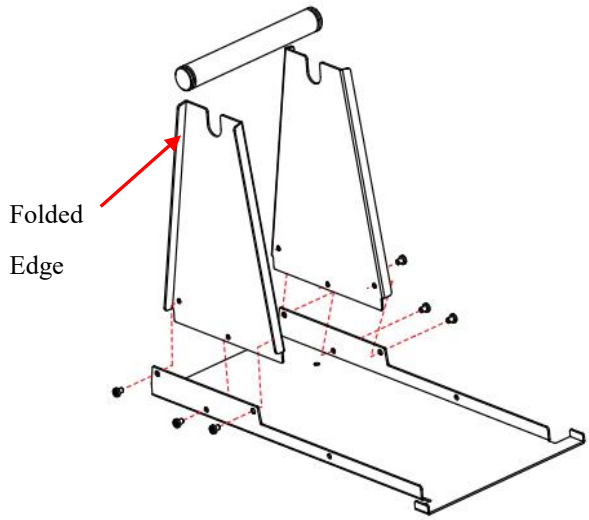

⚠Note: When installing the side panel, the folded edge must face outward.

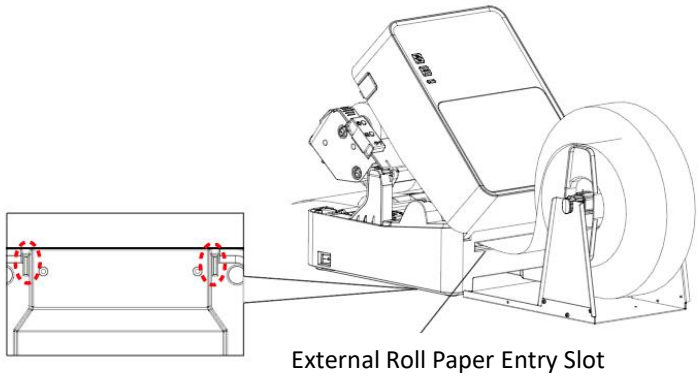

3.2 Power Connection

Connect the printer power supply as shown in the following figure.

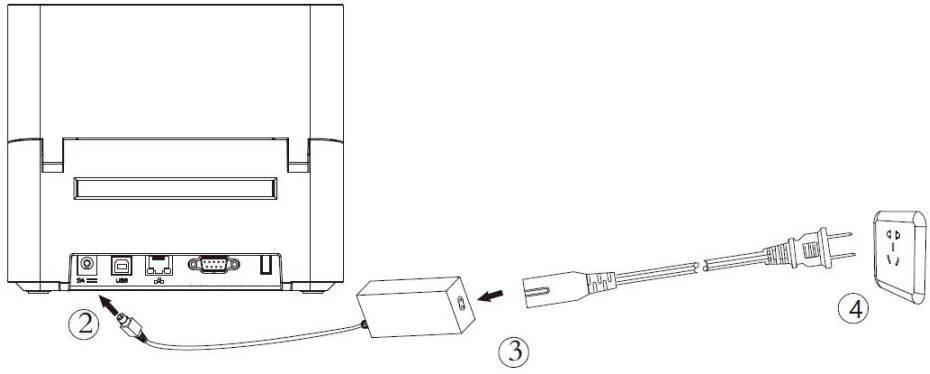

1. Make sure the printer's power switch is in the off position.
2. Confirm whether the voltage of the AC adapter matches the voltage of the power supply.
3. Connect the AC adapter to power receptacle.
4. Connect the power cord to AC adapter.
5. Connect the other end of power cord to the outlet.

Note:

- Use the original power adapter only. Avoid the damage caused by charging improperly.
- Please unplug the printer power cord if it is not in use for a long time.

3.3 Interface Cable Connection

Connect the interface cable as shown in the following figure.

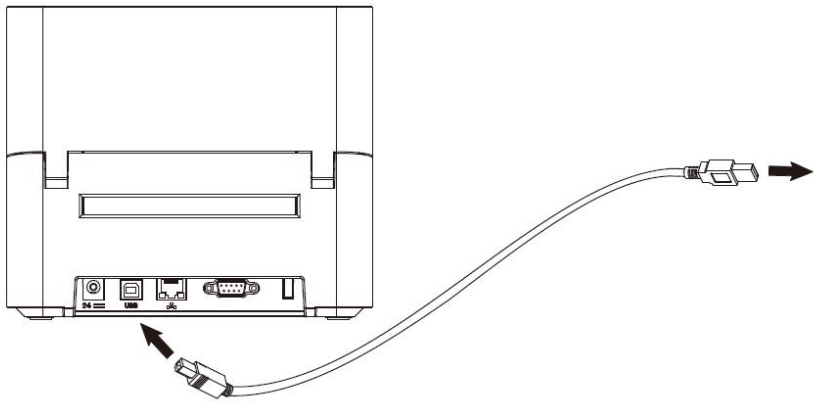

3.5 Operation Panel

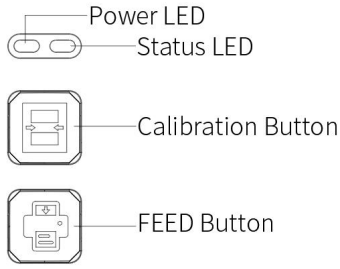

1)Power LED and Status LED

Notify users of printer information through different indicator colors and status.

2)FEED Button

- Pressing FEED button, printer will feed paper to the specified position according to the paper type. When using continuous paper, pressing FEED button once will feed a fixed distance. When using label paper, pressing FEED button once will feed a whole label paper.

  Press the FEED button, while printing, and the current page will pause after printing; Pressing the FEED button again will continue printing.

  Note: If the label paper cannot be positioned correctly, please follow the instructions in section 3.6.3 for quick calibration.
- Press and hold the Feed + Calibrate buttons at the same time. Release them as soon as both LEDs flash rapidly in green (Note: Do not long-press continuously).

  Each simultaneous press will cycle through the paper types. For example,switching from gap lapels to black mark lapels requires performing this operation twice (following the loop sequence shown in the diagram below)

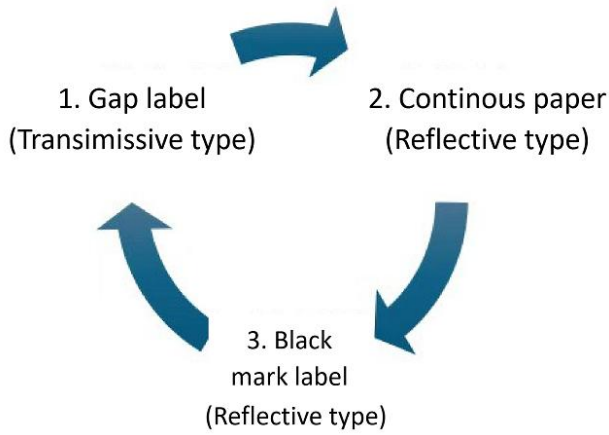

Description of indicator status:

Power	Status	Description
Green	x	Ready
Green	Slowly flash red	Out of paper
Green	Red	The upper cover is not closed
Green	Fast flash red	Off label
Green	Fast flash red	Paper Jam, Abnormal label

Power	Status	Description
		calibration
Green	Fast flash green	Data being received
Green	Slowly flash yellow	Pause of printing
Fast flash green	Fast flash red	Overheat of printhead
Green	Slowly flash yellow	Program upgrading
Green	Yellow	Out of ribbon

3.6 Basic Operation

3.6.1 Power on/Power off

Press “O” to power off the printer. Press “I” to power on the printer.

3.6.2 Feed

Pressing FEED button, printer will feed paper to the specified position according to the paper type. When using continuous paper, pressing FEED button once will feed a fixed distance. When using label paper, pressing FEED button once will feed a whole label paper.

3.6.3 Quick Calibration

Note: In the following two situations, users must carry out the calibration under the conditions below:

① The first time to use the printer since installation.

② Change a new printing mode (switching the thermal and ribbon printing mode).

Calibration method:

1. Carry out the calibration manually:

In the ready state, press the calibration button once.

2. Complete the calibration through printer tool software (see "Chapter 6 Printer Utility Tool Instructions" for details)

Caution: After the calibration, users could open the printer cover to pull back the learned paper in avoid of paper wasting.

3.6.4 Printing Self-test Page

Users can print the self-test page in the following way, and the content of the self-test page can help users check the status of the printer and confirm whether it is working properly.

- **Printing Manually**

1) Make sure the roll is loaded properly. Then turn on the printer.

2) Make sure the printer is in the “off” position.

3) When the printer is ready, press and hold the FEED button, turn on the power, wait for the READY indicator to turn yellow and green, then release the FEED button, and the printer starts to print the self-test page.

- **Printing by Windows Driver Program**

1) Install the Windows Driver program. Please refer to “Chapter 7 Windows Driver Instructions” for more detailed information.

2) Please set the “Interface” as the type you use.

Use the Windows Driver Program to print out the “Self-test page”.

Chapter 4 Interface

4.1 USB Interface

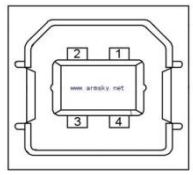

Figure 4-1

PIN	SIGNAL NAME
1	VBUS
2	D-
3	D+
4	GND

4.2 Ethernet Port

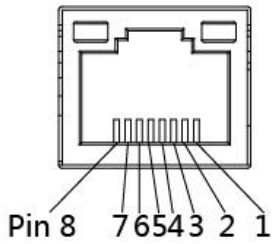

Figure 4-2

PIN	SIGNAL NAME
1	TX+
2	TX-
3	RX+
4	-
5	-
6	RX-
7	-
8	-

Chapter 5 Maintenance & Adjustment

Dust, foreign matter, viscous substances, or other contaminants adhering to the print head or printer may reduce print quality. When dirty, clean the print head as follows.

※ CAUTION

1）Make sure to turn off the printer prior to cleaning.

2）As the print head gets hot during printing, if intending to clean the print head, turn the printer off and wait approximately 2~3 minute before commencement. If intending to clean the print head, turn the printer off and wait approximately 2~3 minute before commencement.

3）When cleaning the print head, take care not to touch the heated portion of the print head in case that print head is susceptible to damage from static electricity, etc.

4）Take care not to allow the print head become scratched and/or damaged in any way.

5.1 Cleaning Thermal Print Head

1）Open the Printer Cover and then use the cleaning pen (or cotton swab with diluted alcohol or isopropanol) to clean the head in the direction from the center of the head to two sides.

2）After cleaning the print head, do not use the printer until the alcohol used for cleaning evaporates completely (1~2 min) and the printer has completely dried.

5.2 Cleaning Sensor, Platen and Paper Path

1）Open the printer cover and then remove the paper.

2）Remove any dust or foreign substance using dry cloth or cotton swab.

3）Soak the cloth or cotton swab in alcohol for medical use and use it to remove adhesive foreign substances or other pollution materials.

4）After cleaning the parts, do not use the printer until the alcohol evaporates completely (1~2 min) and the printer has completely dried.

※ Clean the parts whenever print quality or paper detection degraded.

Chapter 6 Printer Utility Tool Instructions

6.1 Installation Preparation

Download the printer utility application in the CD. For example, iDPRTUtility VX.X.X.X.

6.2 Usage

Note:

- **Under different operating system, the screen has slight difference. The following example is based on the Windows 10 operating system.**
- **It is recommended to close the relevant security protection software before installation to avoid affecting the installation of the application.**

1. Open the printer utility tool and select the corresponding printer model.

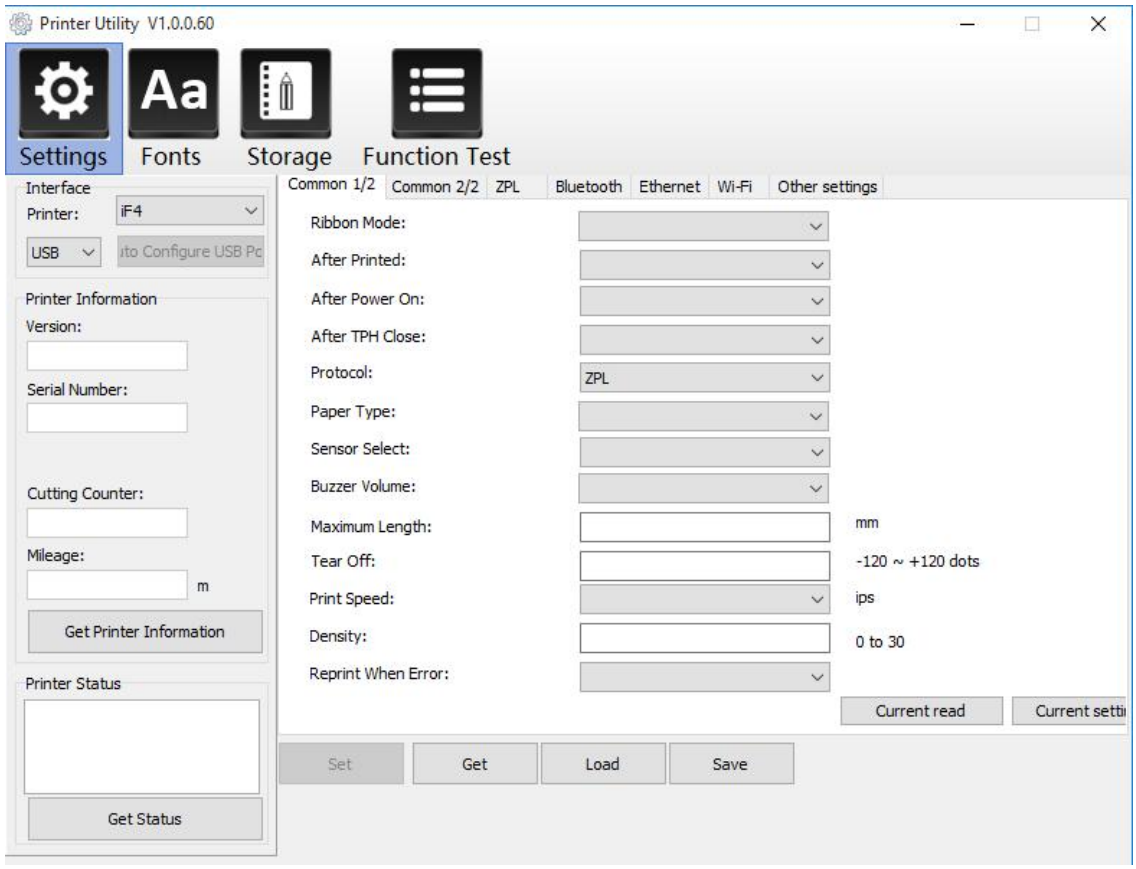

2.Click “Parameter Settings”.

（1） Set up the interface needed. (range: USB, COM, LPT, ETH)

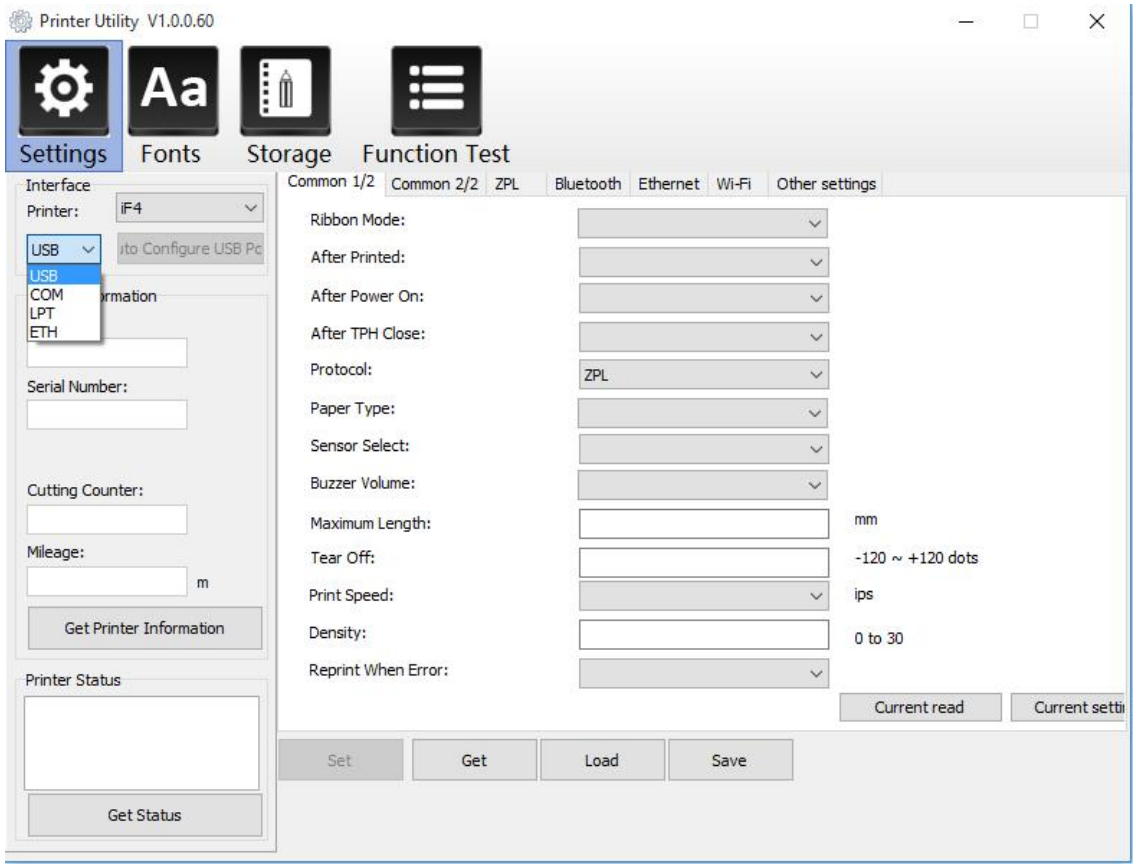

（2） Click “Get Printer Information”, and printer information will show in the above.

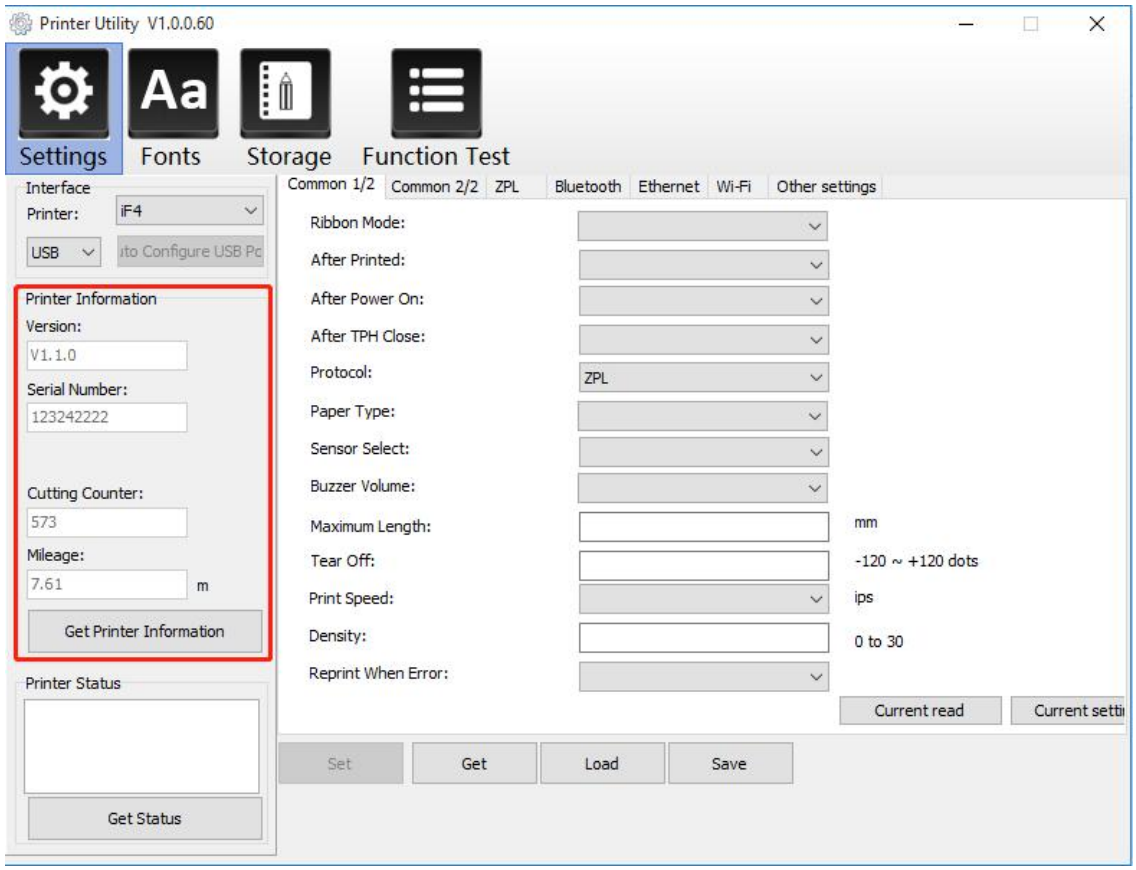

（3）Click “Get Status”, and current status of the printer will show in the above.

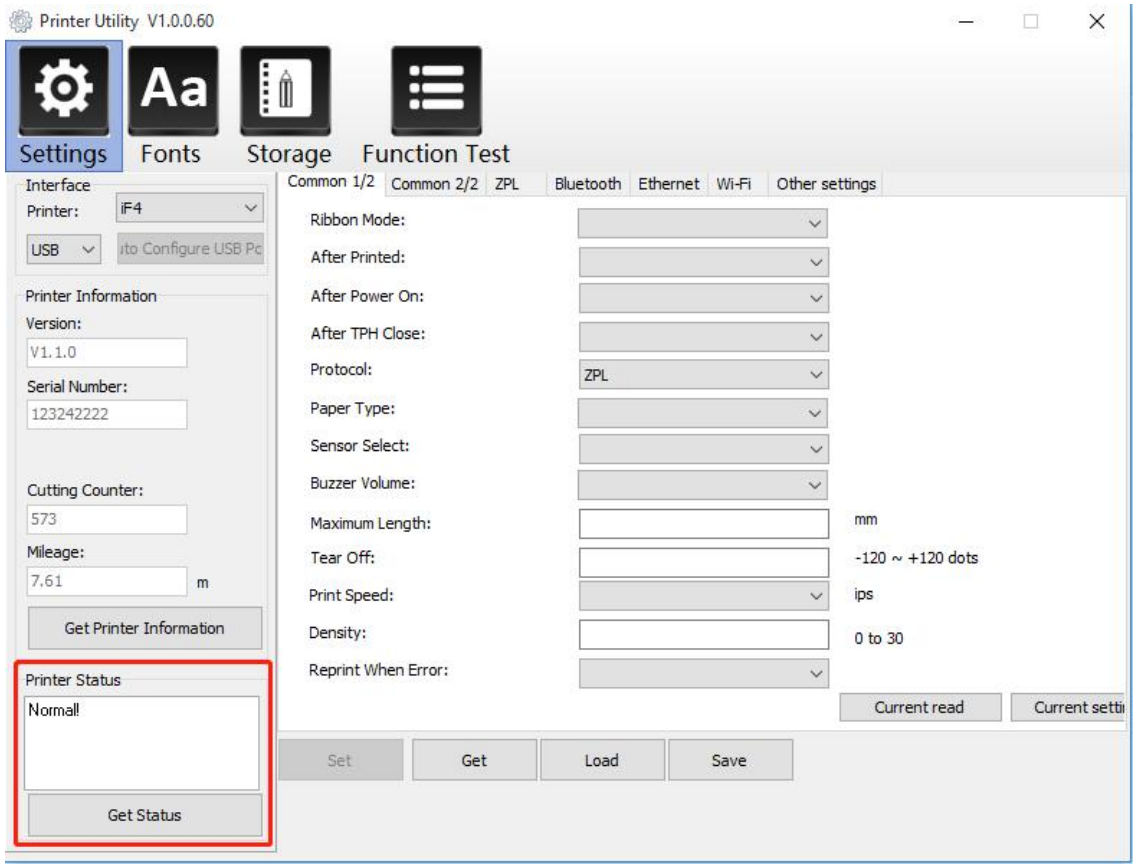

（4）Select "Settings" and then click "Get" to obtain the basic settings information of the current printer. You can change the paper type, protocol, print speed, and density.

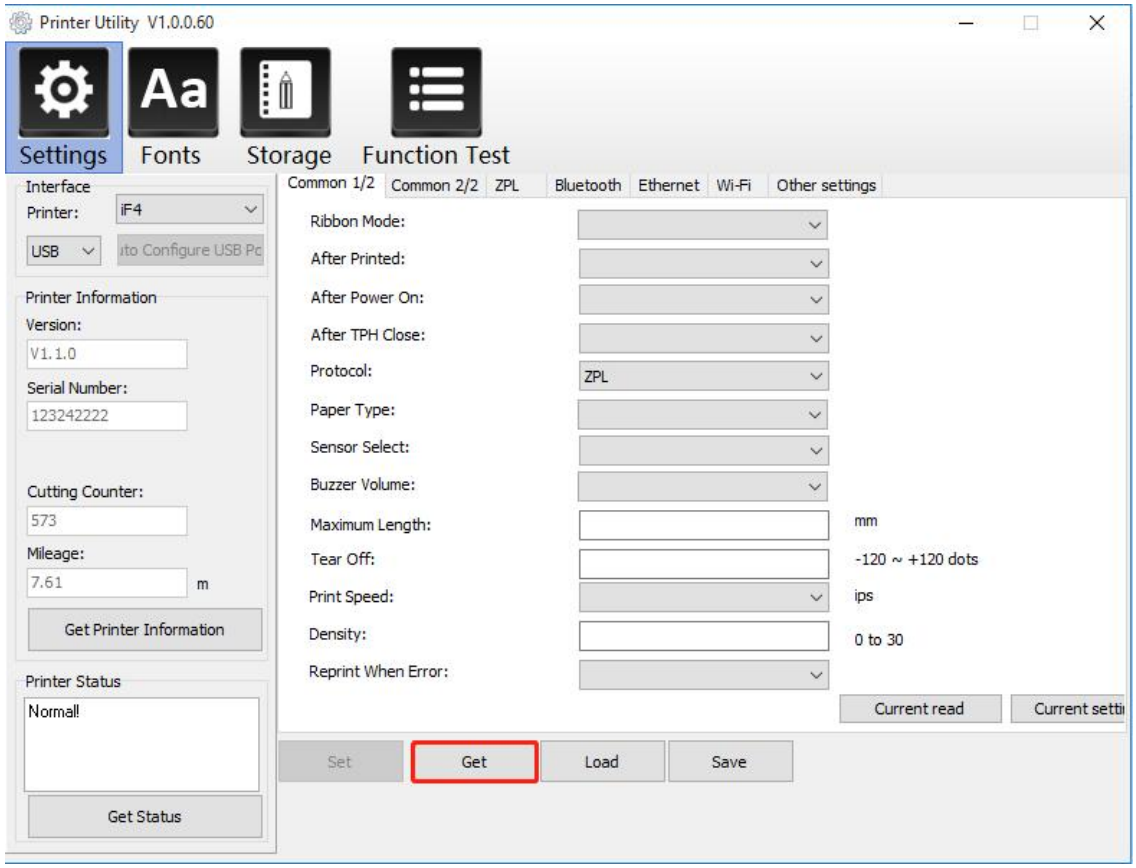

（5）Click “Ethernet” to read Ethernet information or set Ethernet.

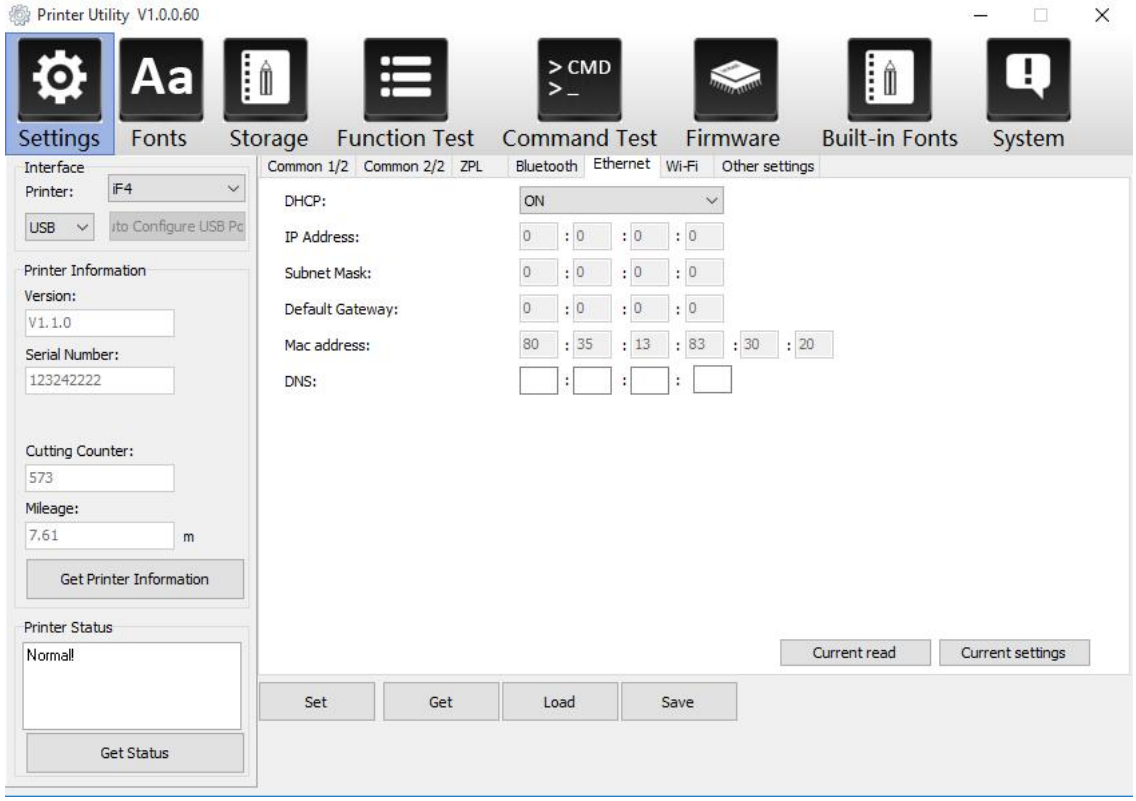

（6）Click "Wi-Fi" to set the wireless SSID and password, etc.

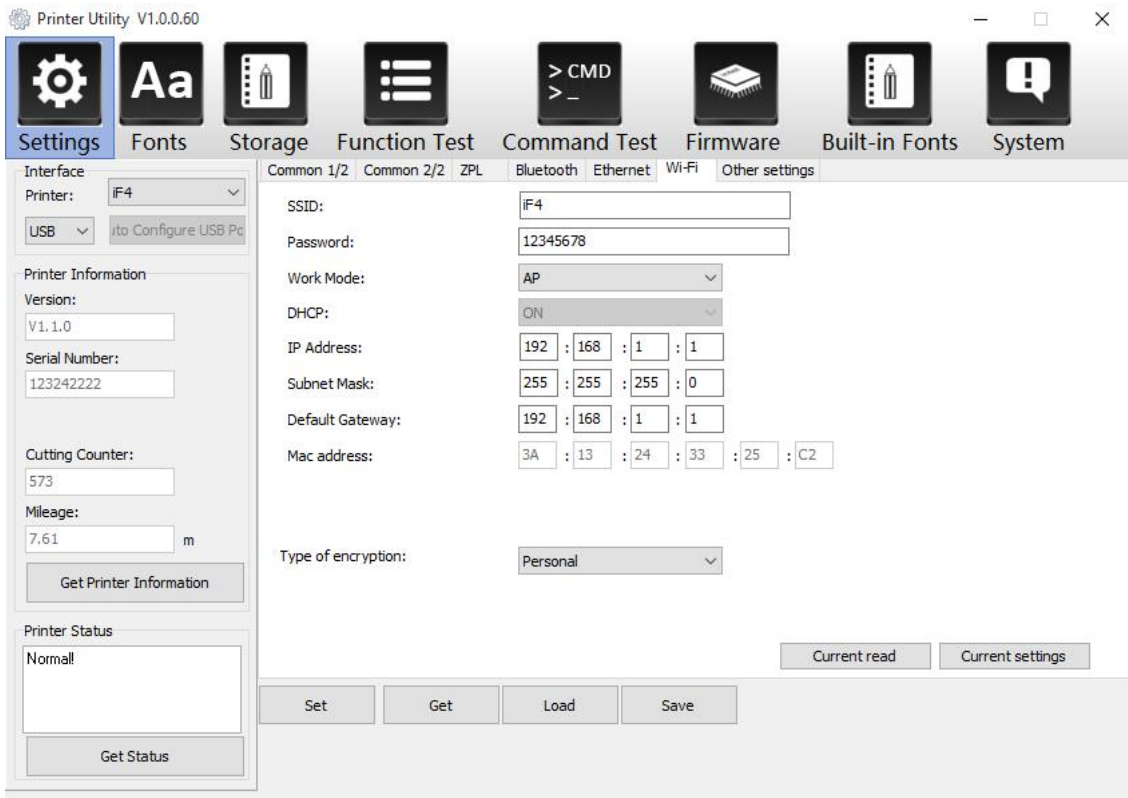

Note: ① Finishing all the settings, user can click “Set” to save the values changed.

② Click “Get”, and the tool gets information about the current settings of the printer.

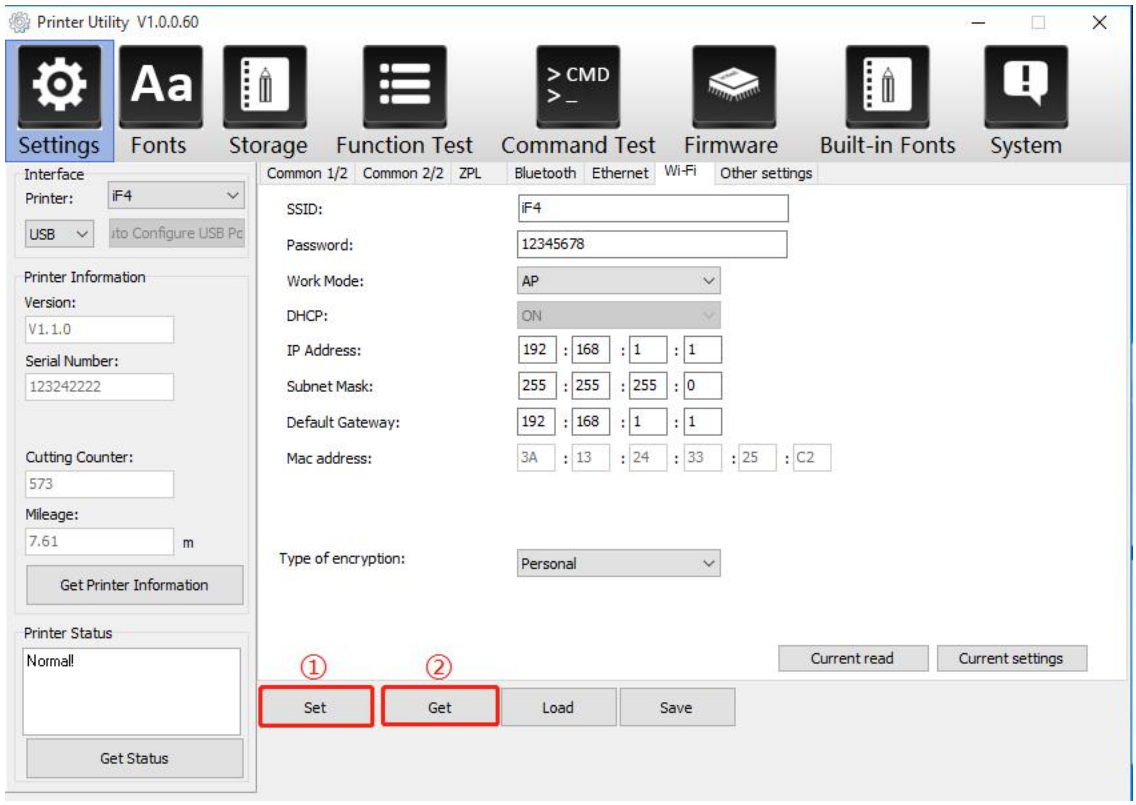

3.Click "Fonts".

（1）Click "Select Font" icon to select the desired vector font.

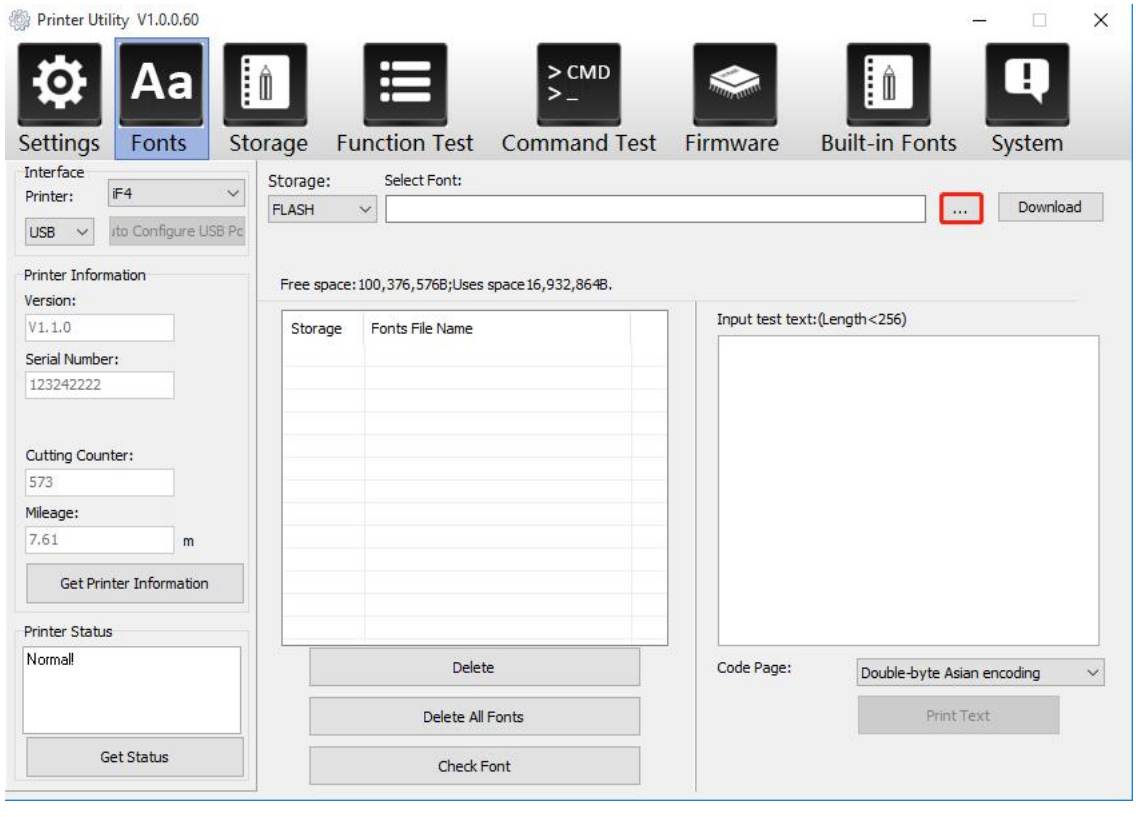

(2) Click “Download” (note: font file names must be in English or numbers).

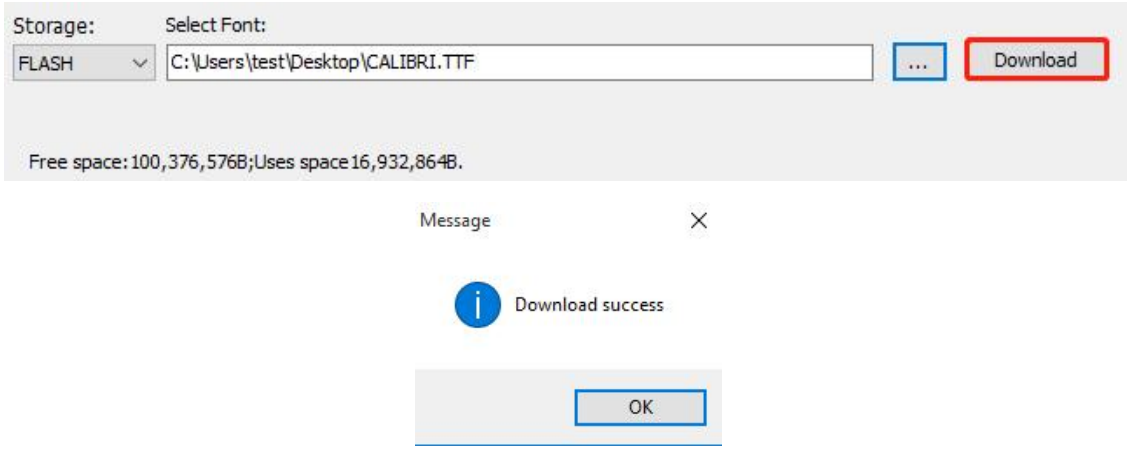

(3) Select the downloaded font file, enter the print content in the text box, and click “Print Text”.

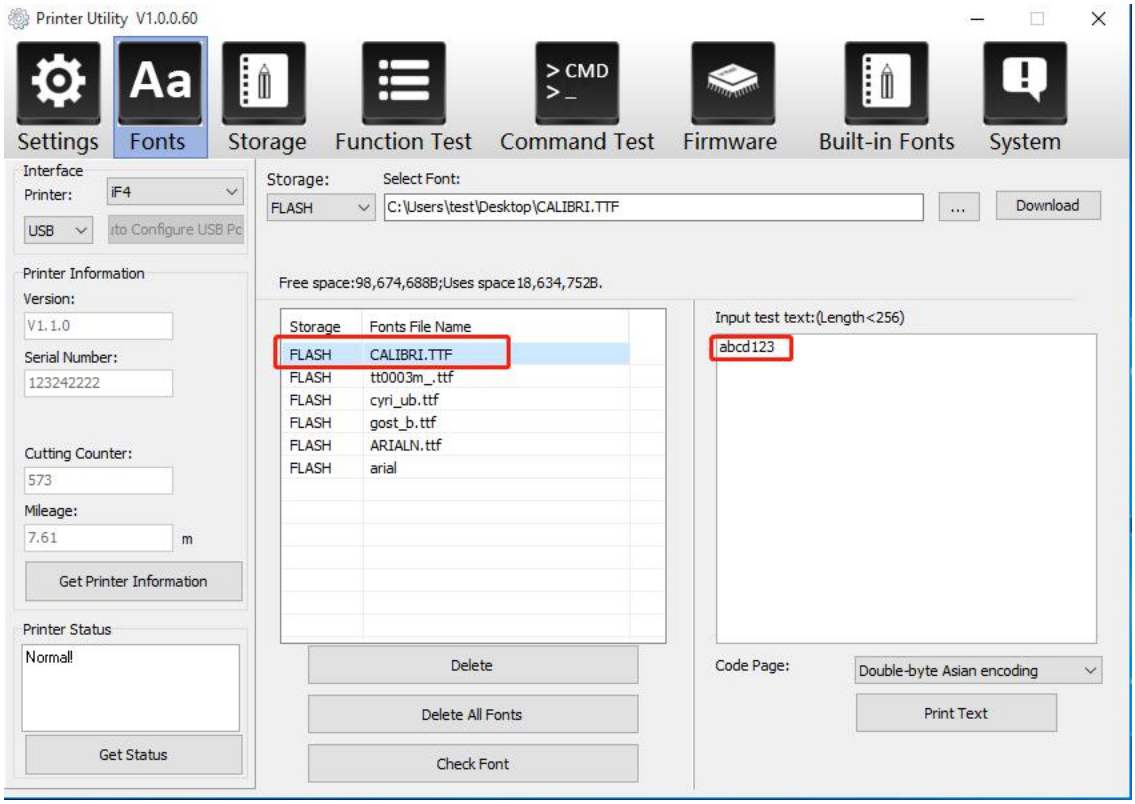

4. Click "Storage", this setting is used to print graphics/label form/auto label form. Taking printing graphics as an example, the same applies to other settings (the file name can only be English or numeric).

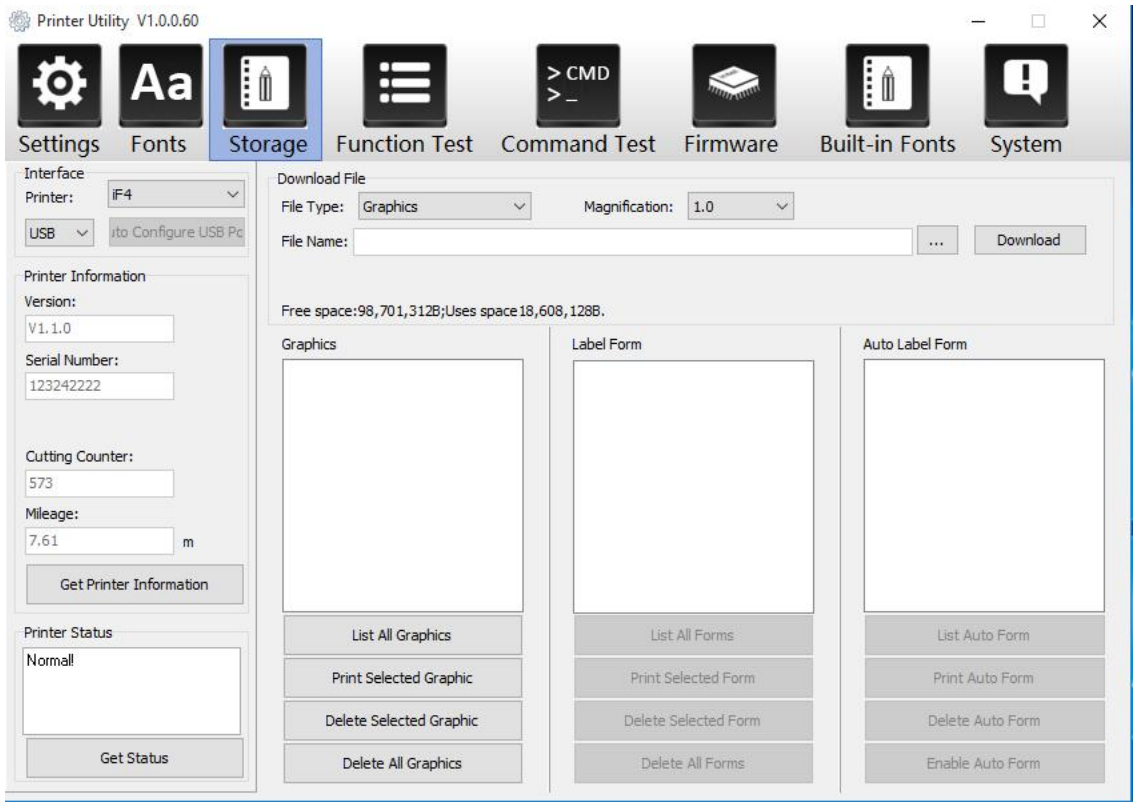

(1) Click "Select File" after the file name to select the image.

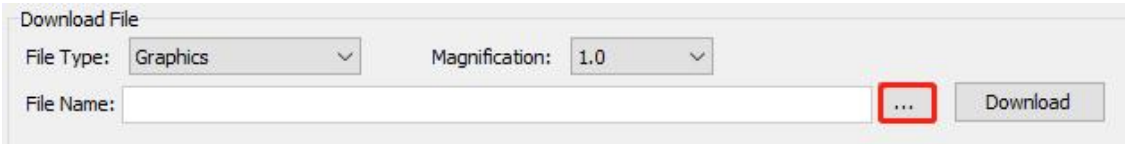

▲Note: The file name must be in English or number, and the filename length must be less than 32.

(2) Click “Download”.

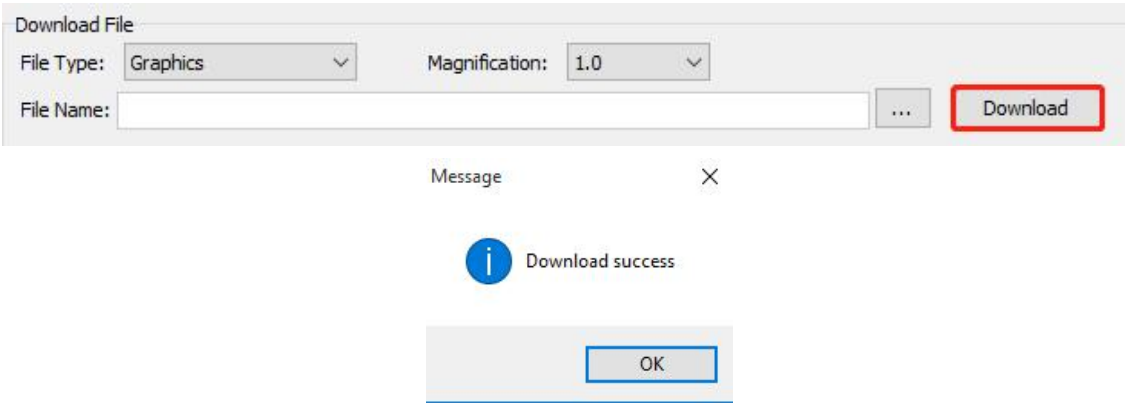

(3) Select the downloaded graphic, and then click “Print Selected Graphic” to print the graphic.

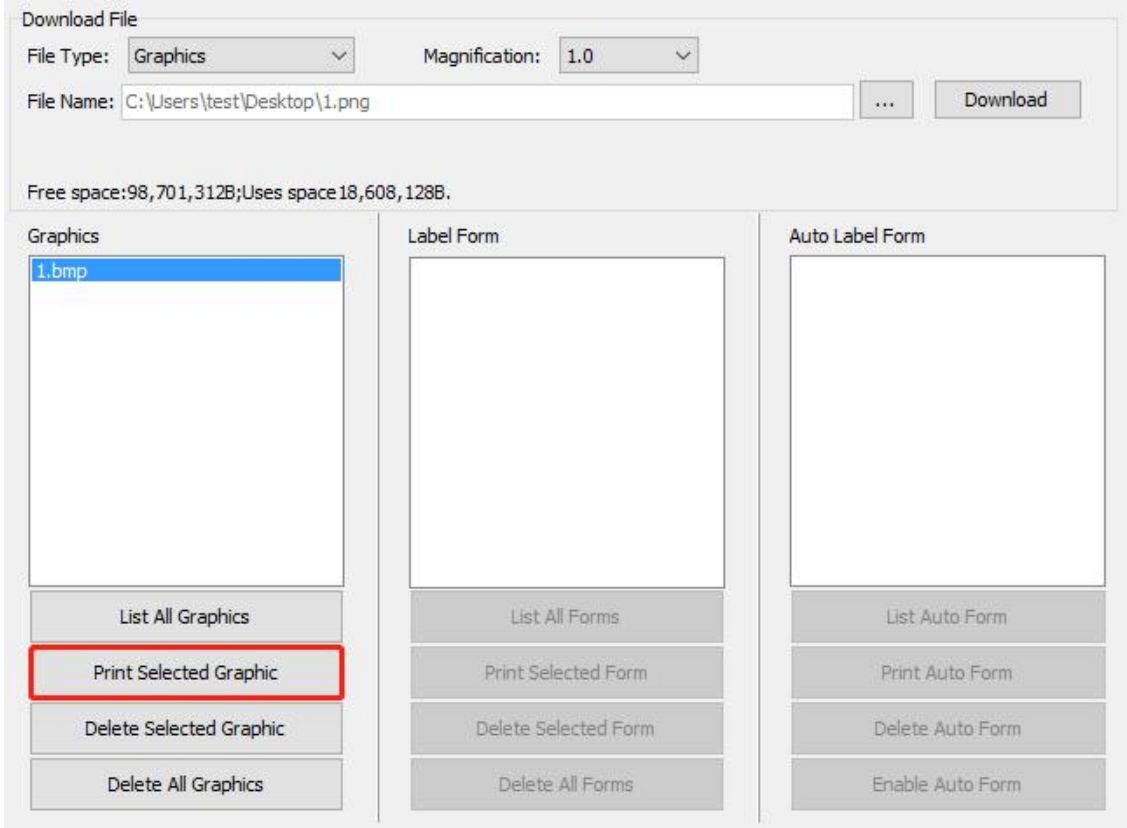

(4) You can set a magnification of the graphic as needed.

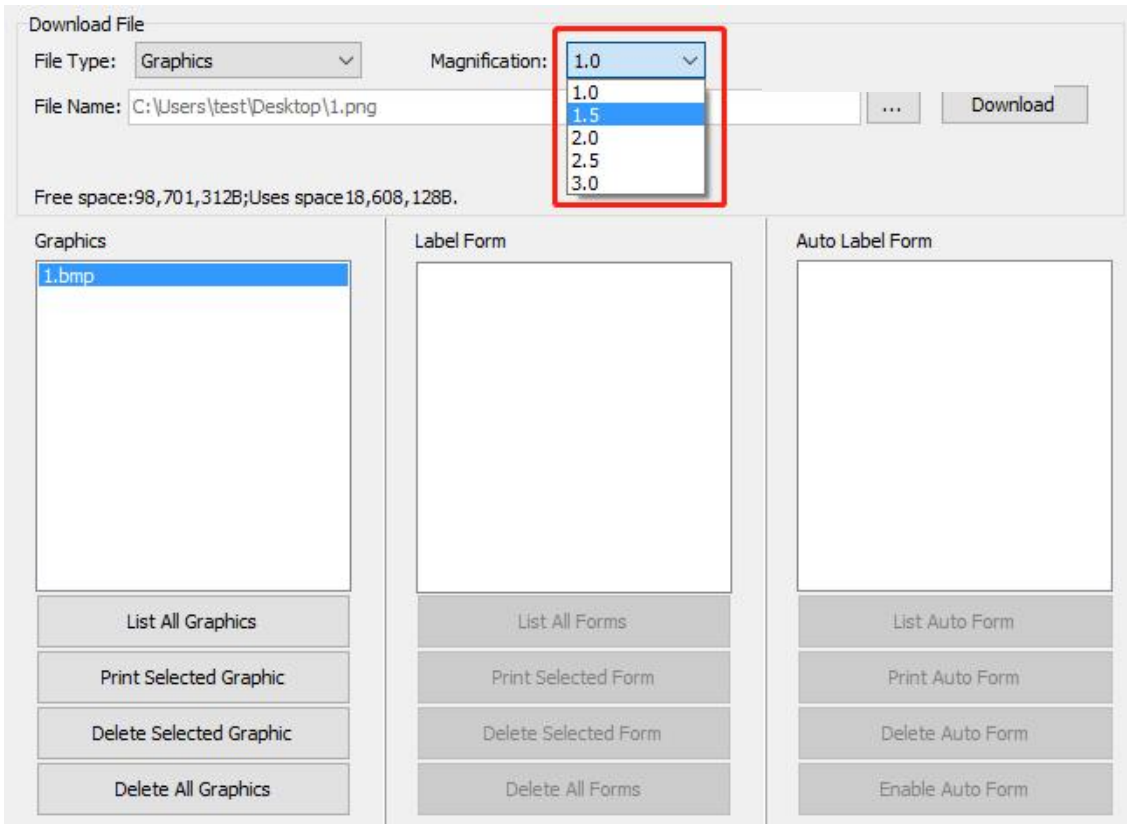

4.Click "Function Test", users can print configuration page, cutter cut testing, restore factory settings and other functions.

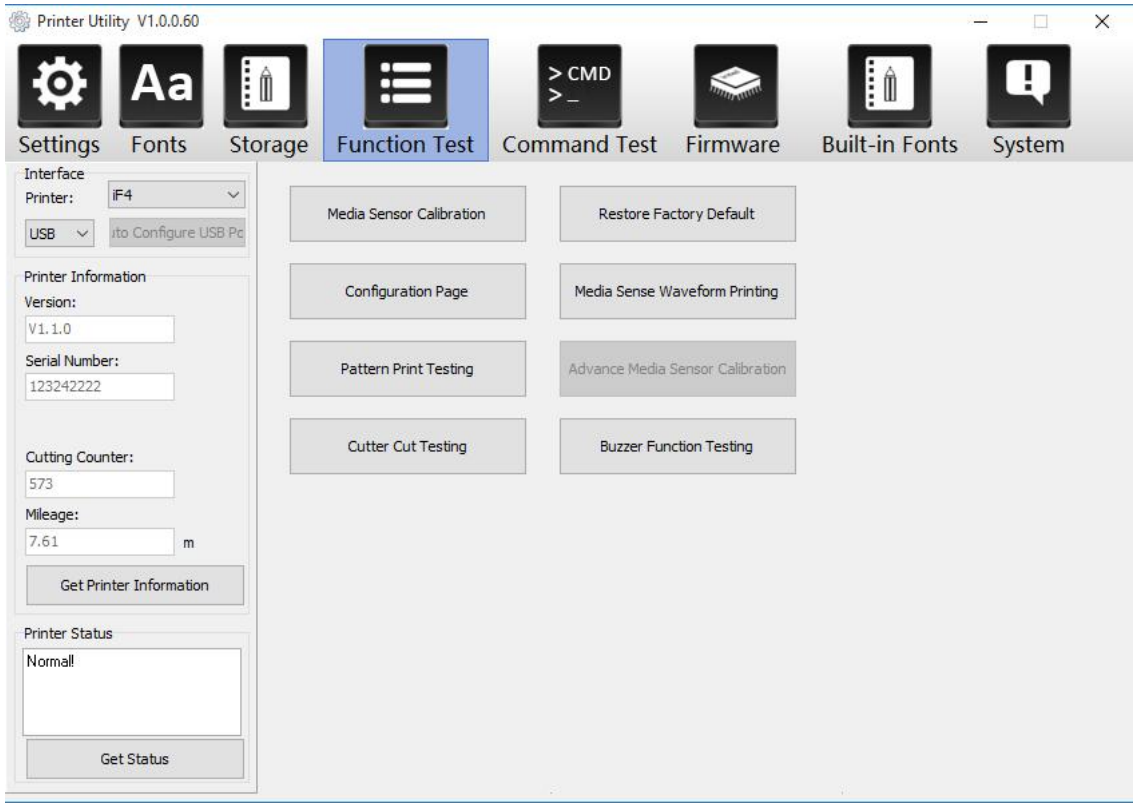

4.Click "System" and click language to set the language of the tool.

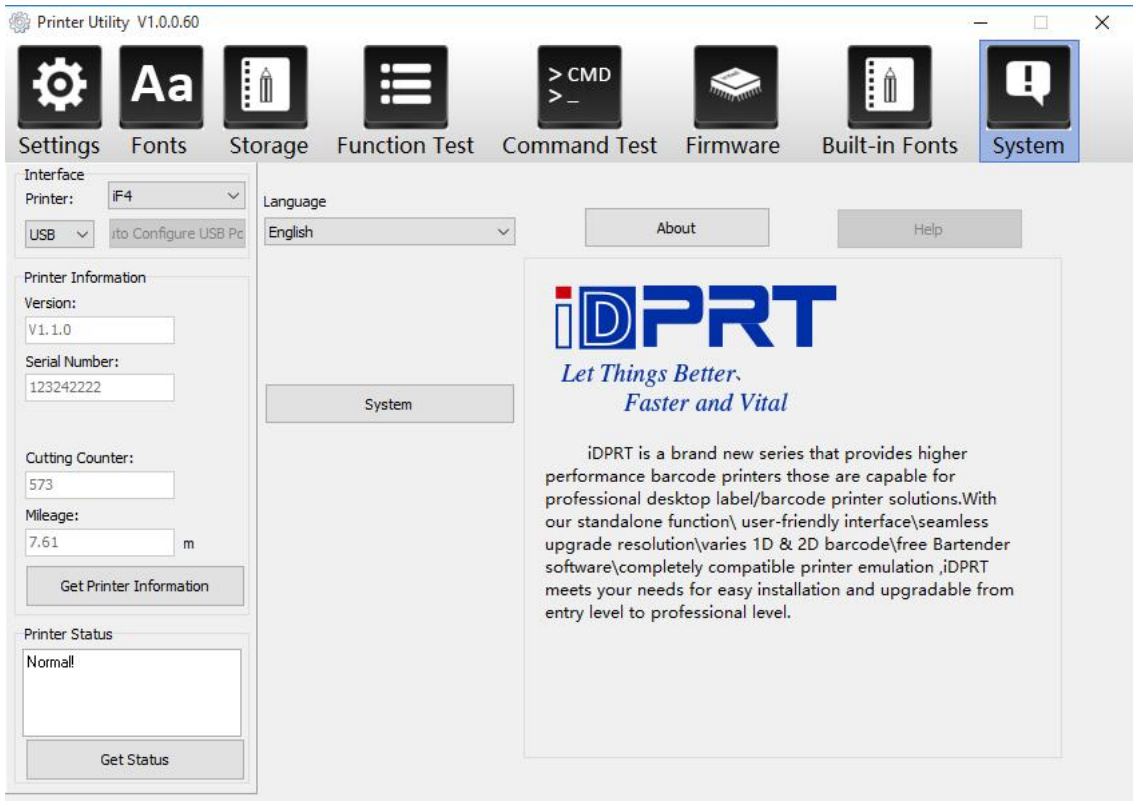

Chapter 7 Windows Driver Instructions

7.1 Introduction

The following operating systems are supported for usage.

- Microsoft Windows 11
- Microsoft Windows 10 (32 bit/64 bit)
- Microsoft Windows 8 (32 bit/64 bit)
- Microsoft Windows 7 (32 bit/64 bit)
- Microsoft Windows Vista (32 bit/64 bit)
- Microsoft Windows Server 2019

7.2 Windows Driver Preparation

Download the Windows driver installation package. For example:

iDPRT_Label_Printer_Windows_Driver_vX X.X.X.

7.3 Driver Installation

Note:

- **Under different operating system, the screen has slight difference. The following example is based on the Windows 10 operating system.**
- **It is recommended to close the relevant security protection software before installation to avoid affecting the installation of the driver.**

1.Select one interface to connect your printer to computer.

2.Turn on the printer check if it successfully connected to computer.

3.Double click Windows Driver Software.

4.Select the language and click 'OK'.

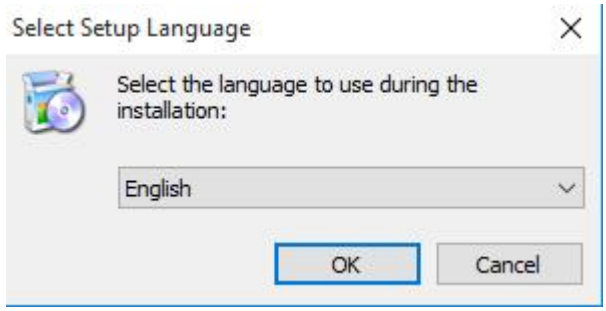

5.After agree to the EULA, click “Next”.

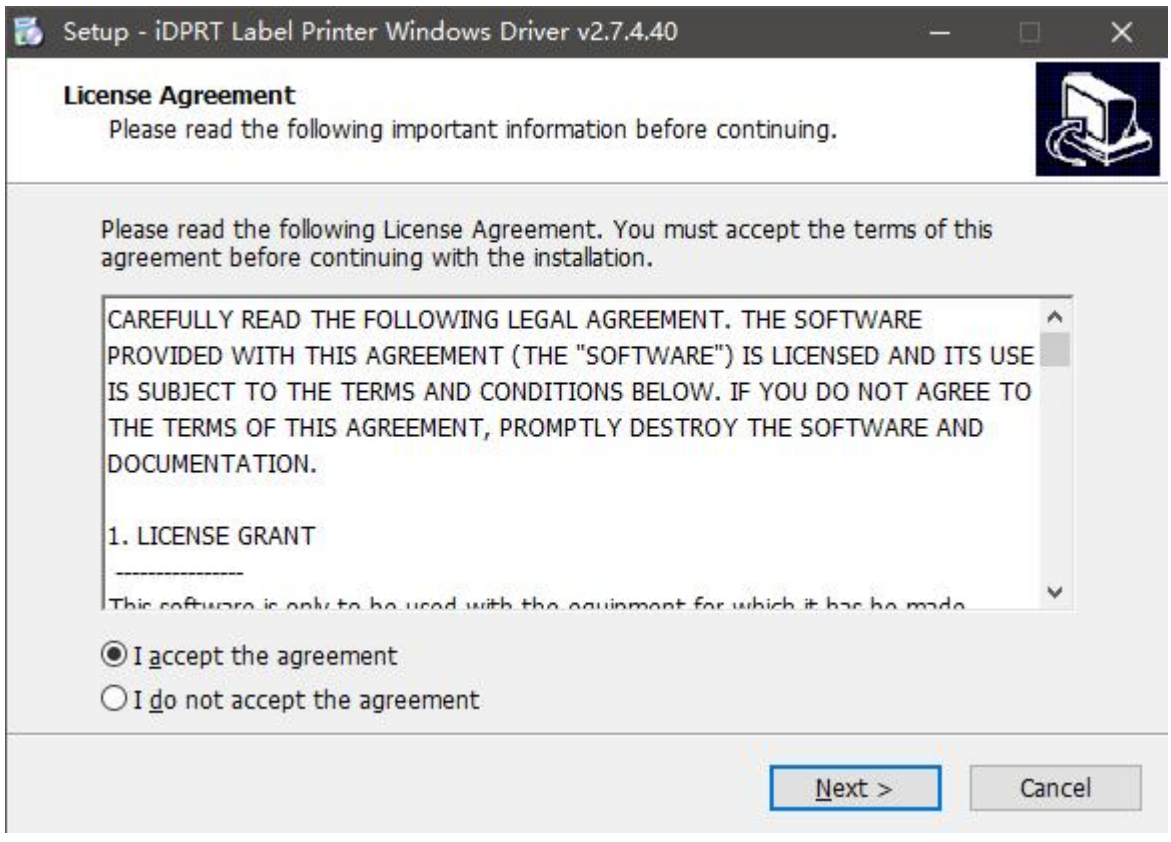

6.Click “Next”.

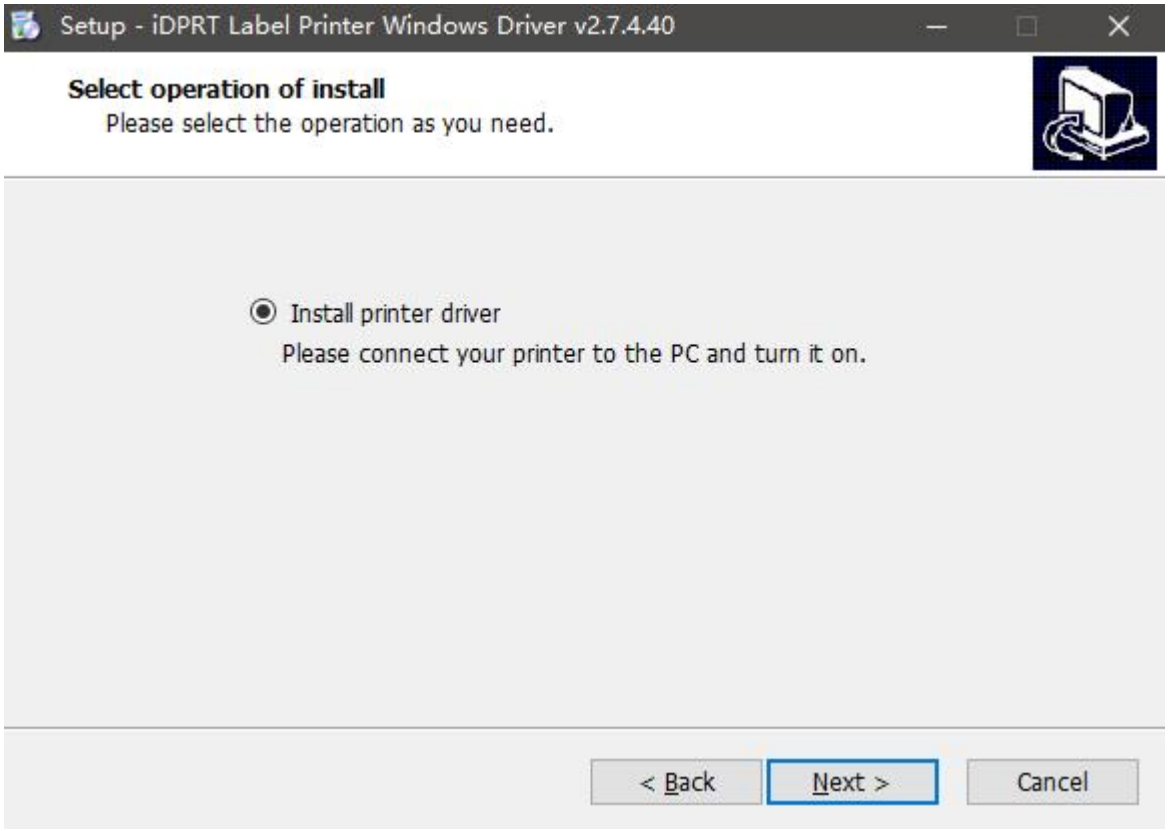

7.Select the printer driver port and click 'Next'.

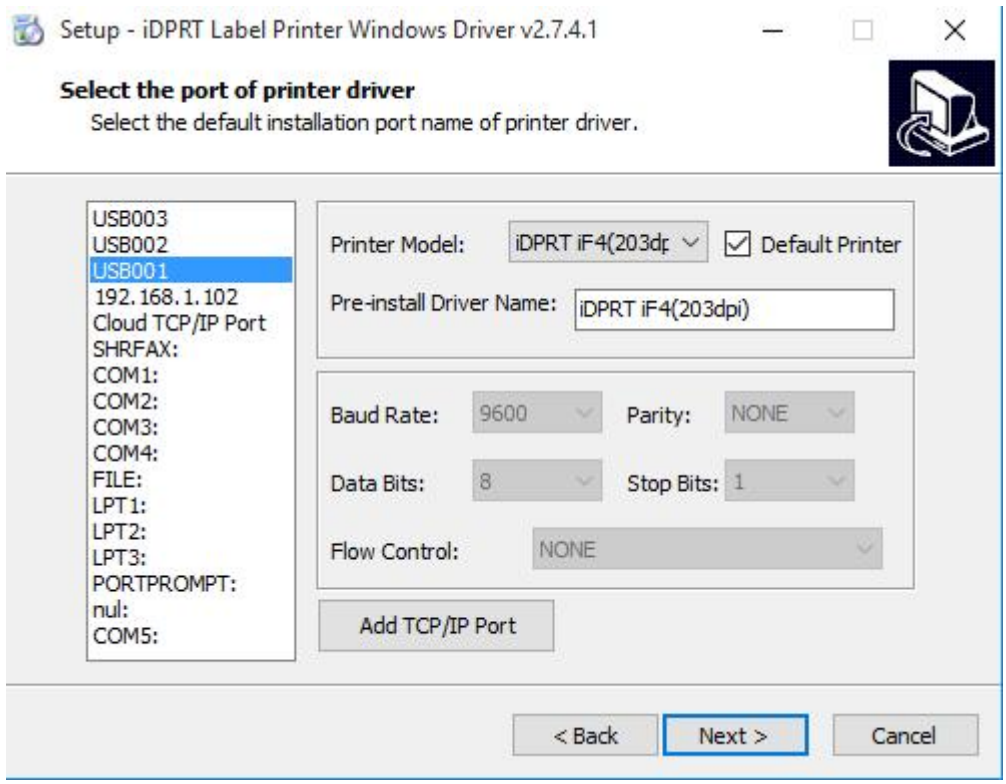

8.Click "Finish".

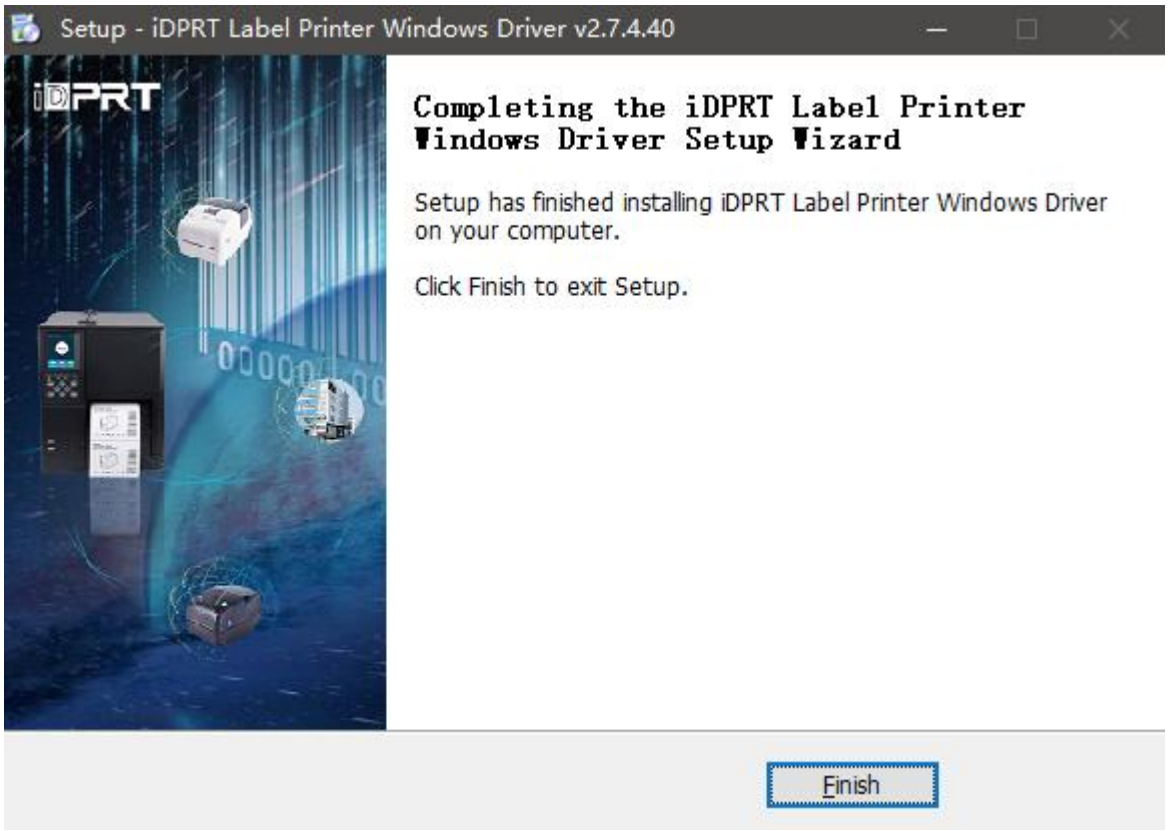

If you already installed the driver (No matter what kind of port), when you connect the printer with computer, it will create a USB port automatically. **(Taking connecting a USB port as an example)**

9.After installation, the icon will be found in "Start" → "Settings" → "Devices" → "Devices and printers".



Note:

- **If already installed the driver (No matter what kind of port), when you connect the printer with computer via USB, it will create a USB port automatically.**

7.4 Usage

7.4.1 Printing Preferences

1. Right click the icon and choose “Printing preferences”.

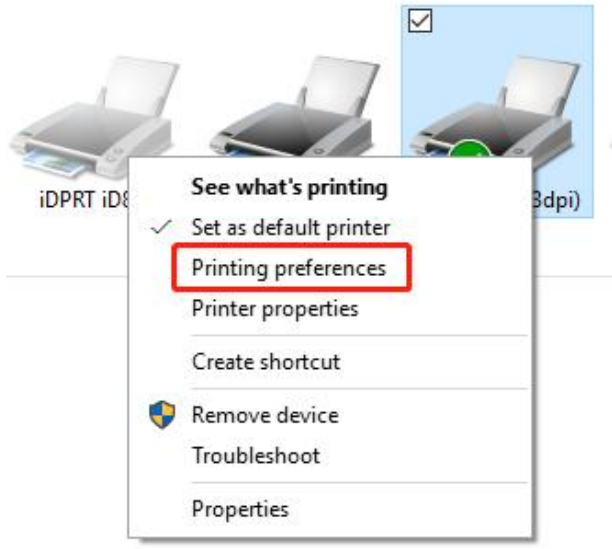

2.According to different needs, set up the page.

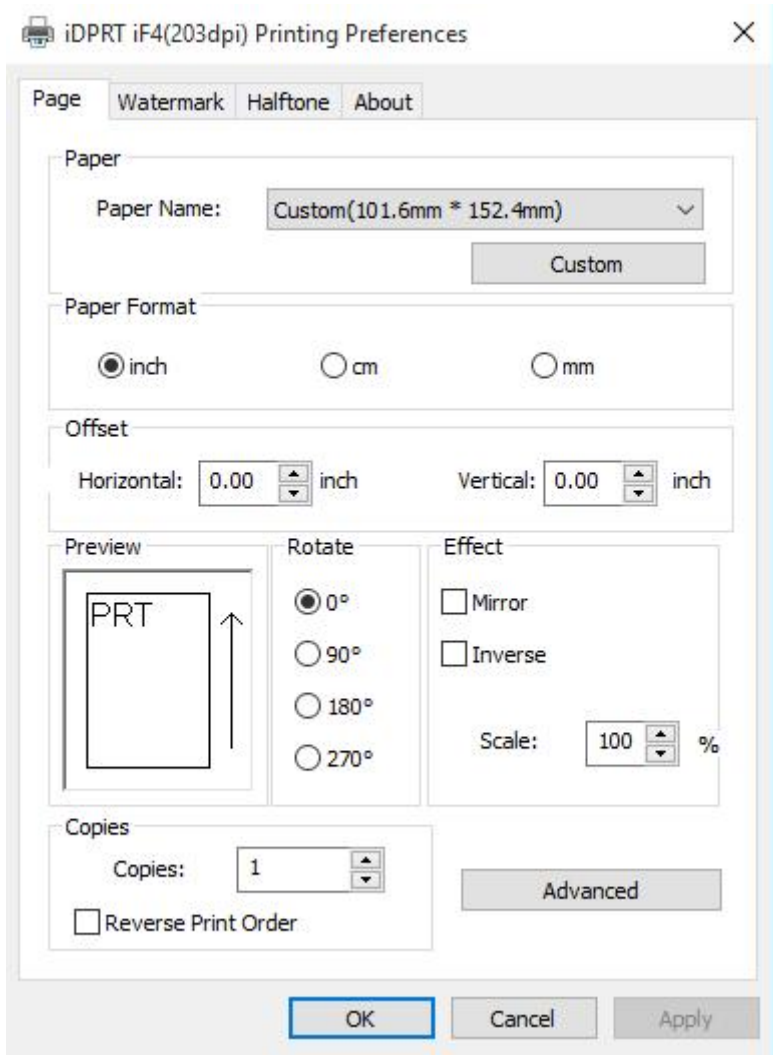

● Click “Page Name” and select the paper type.

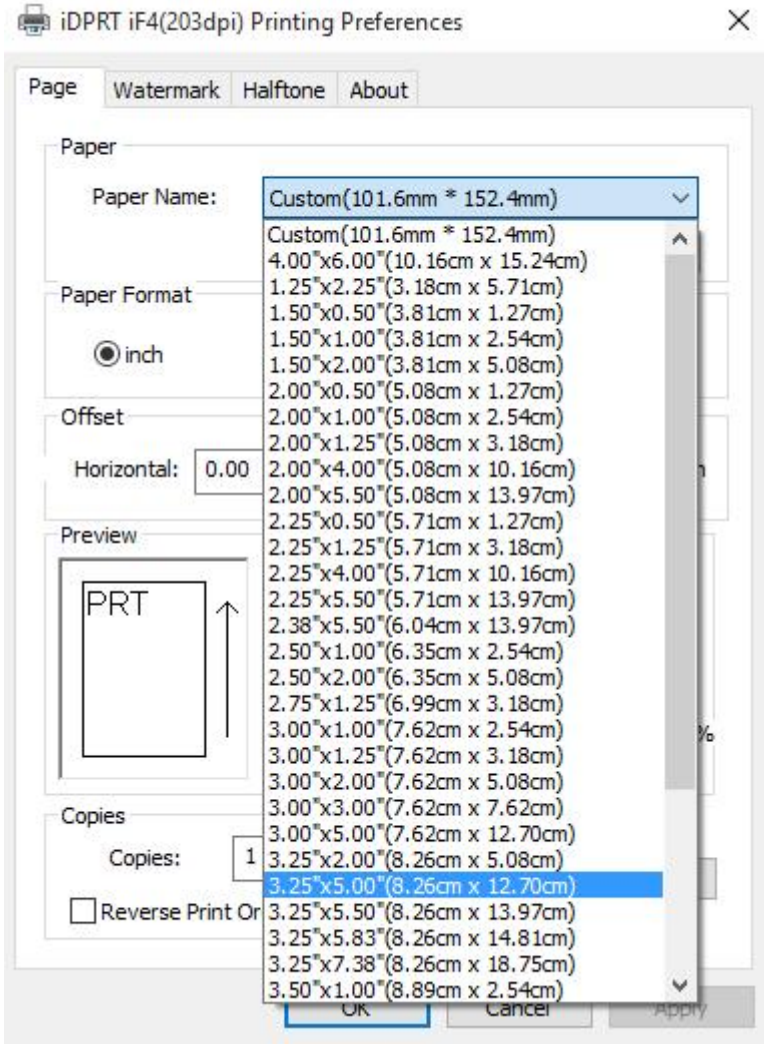

● Click “Custom” to add or delete paper.

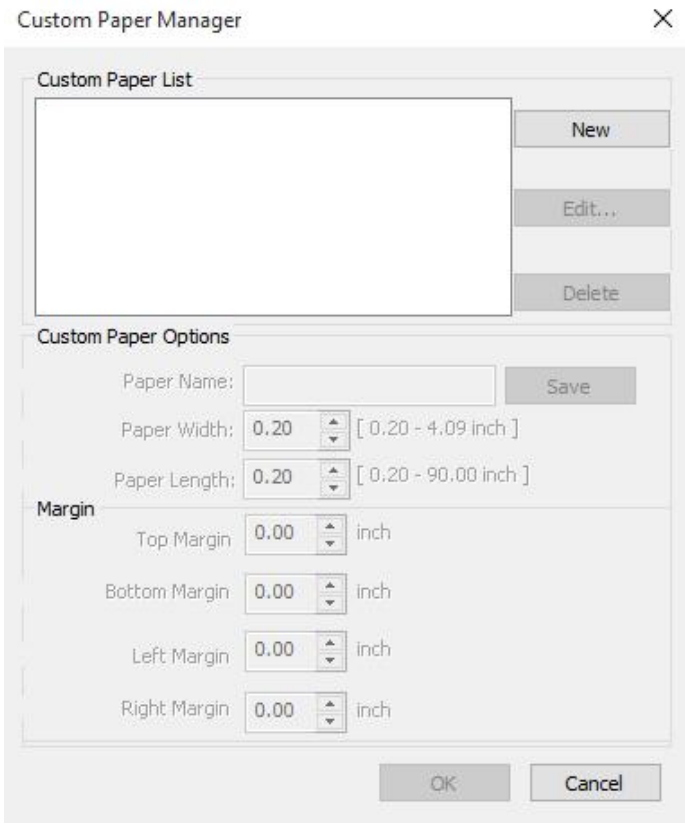

● Click "Horizontal" or "Vertical" to edit the offset effect.

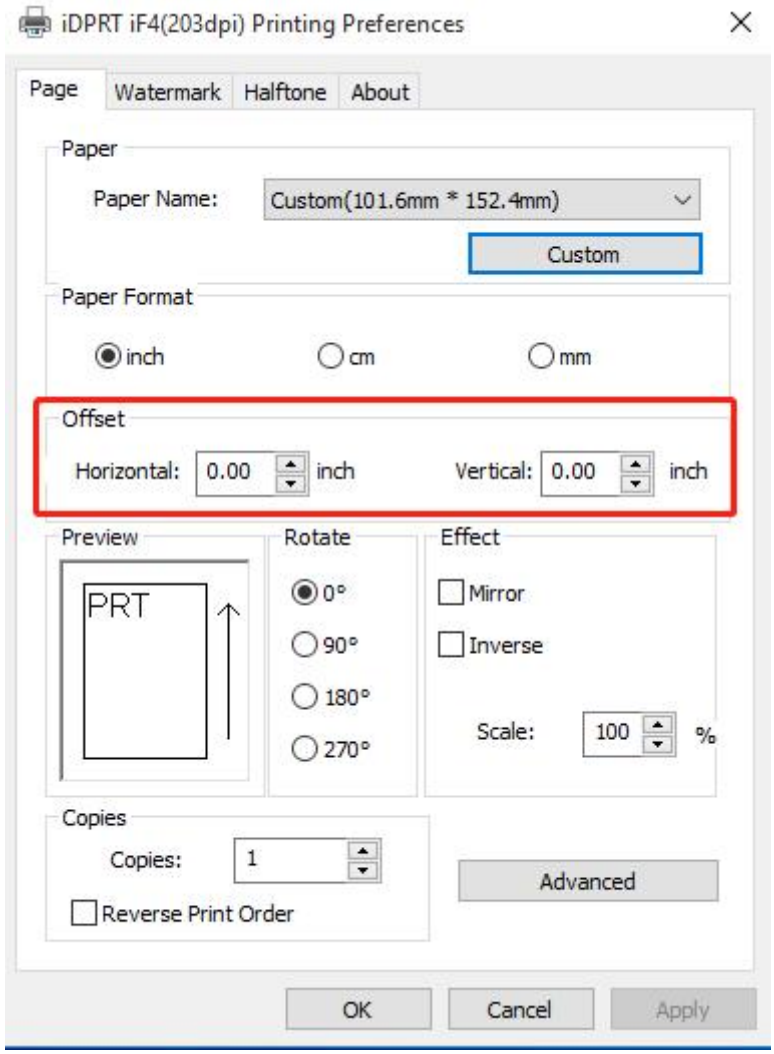

● Choose “Rotate” or “Effect”, showed in the “Preview”.

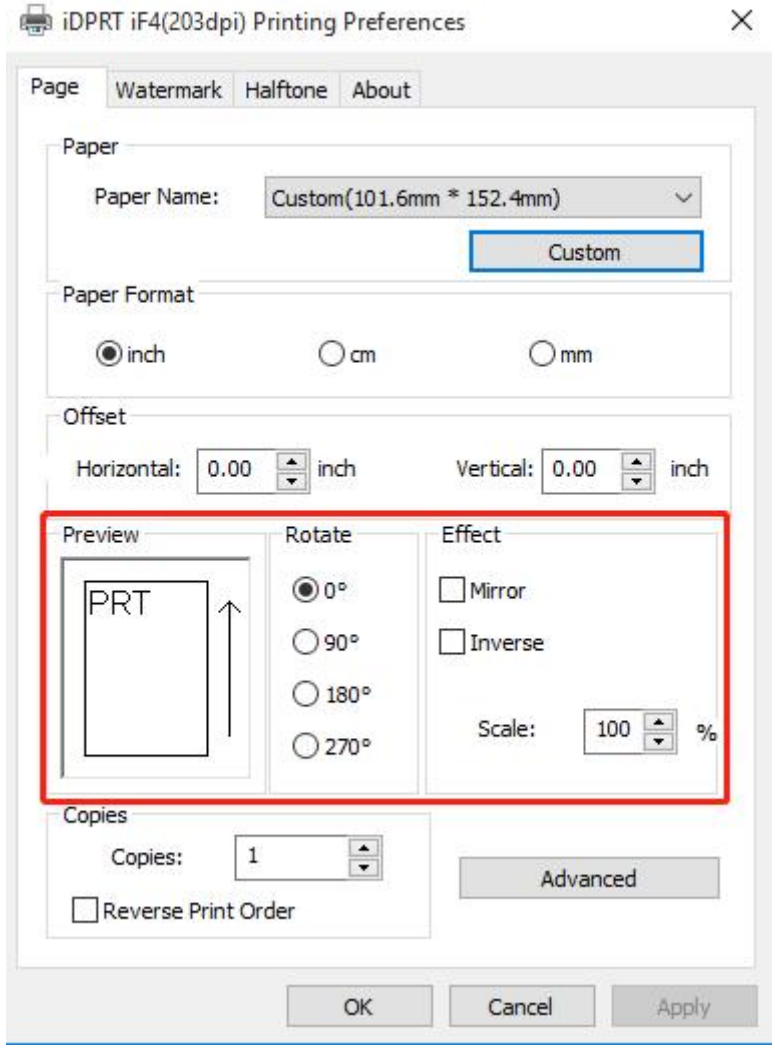

● Click “Advanced”

“Save Paper”:

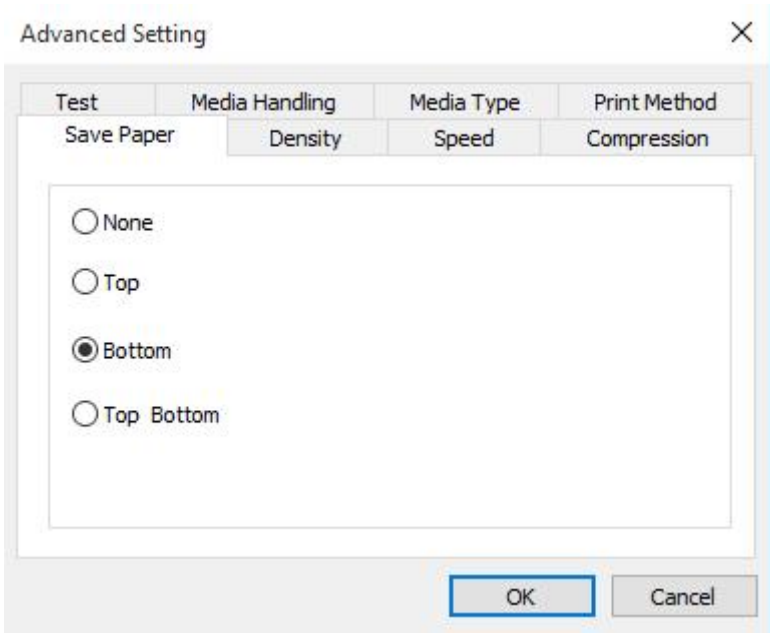

“Density”:

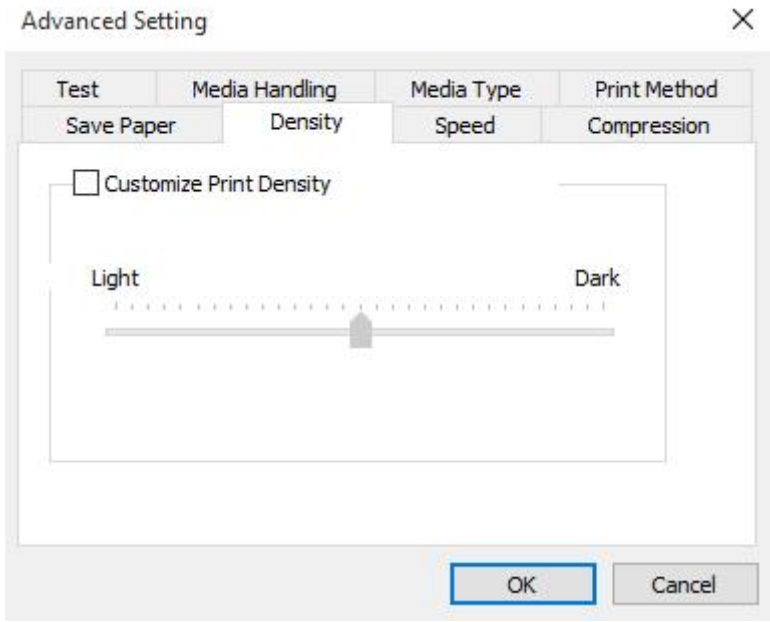

“Speed”:

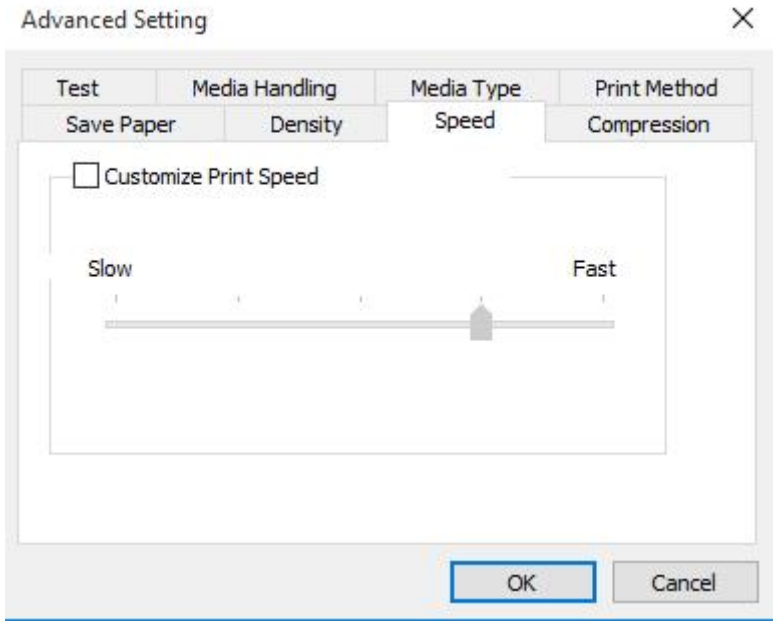

“Test”:

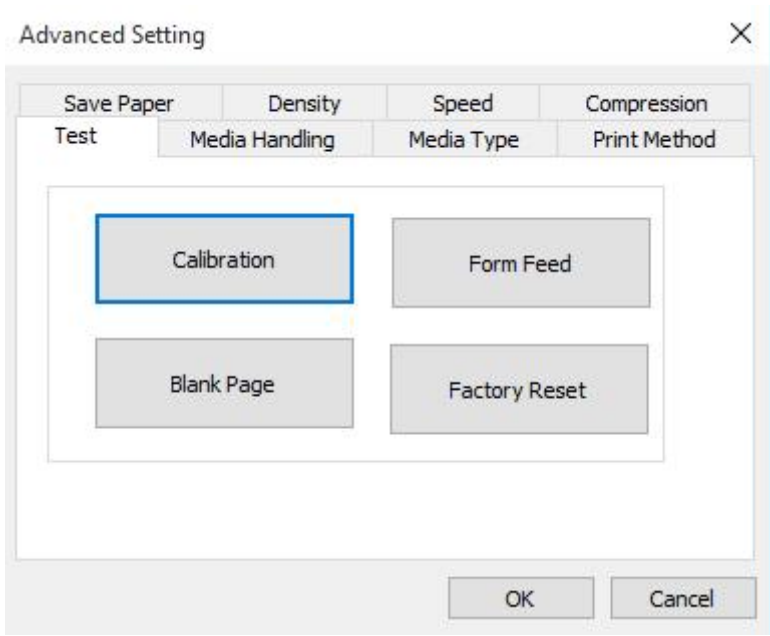

“Media Handling”: select the desired action - tear off/peel off/full cut/partial cut

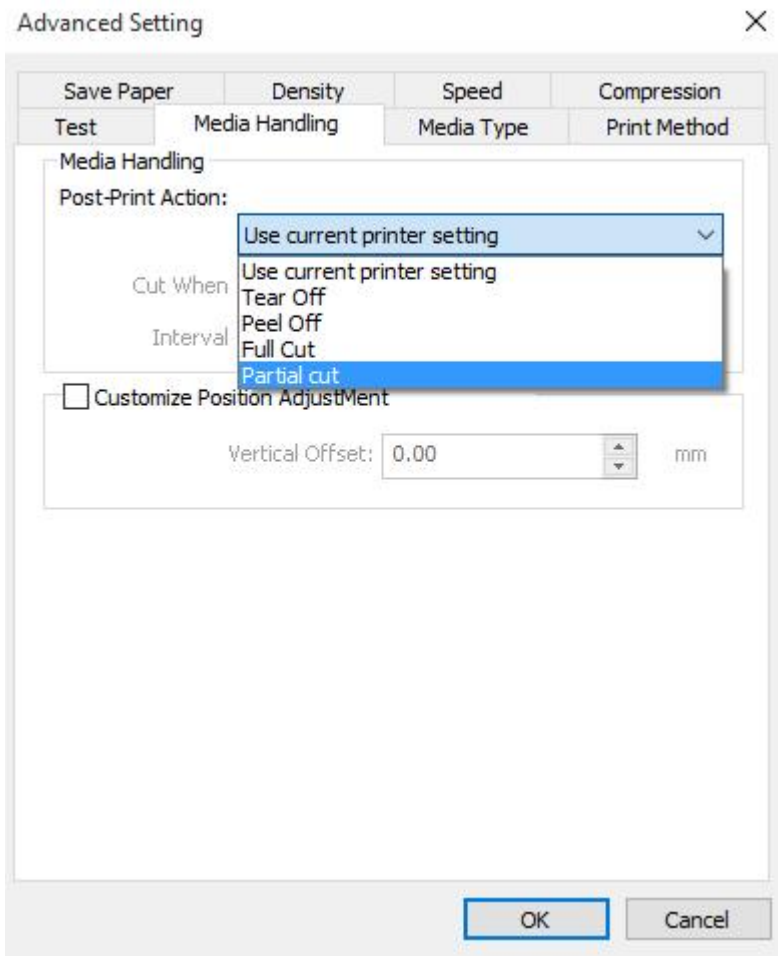

“Media Type”:

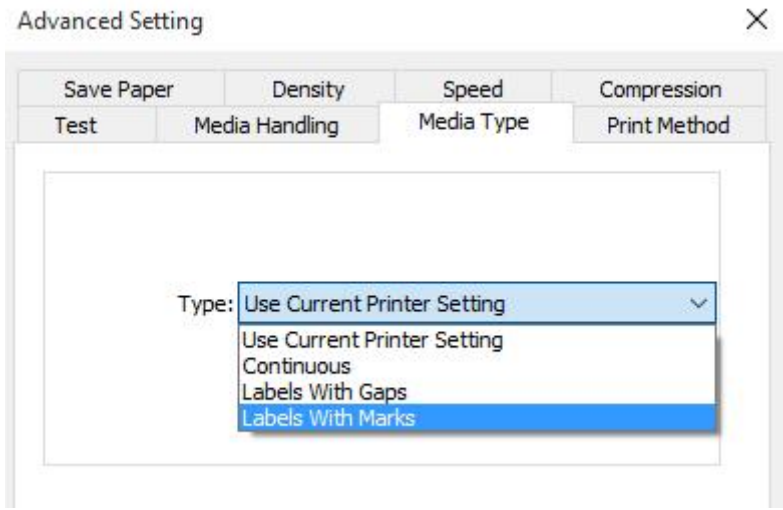

“Print Method”:

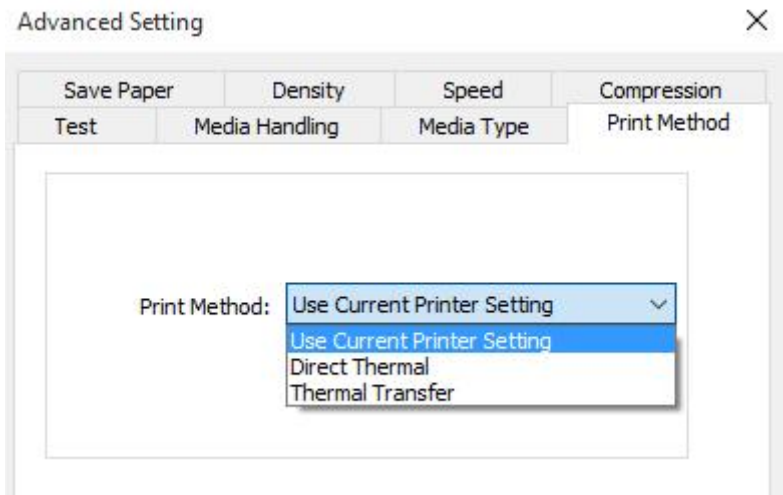

3.Click “Watermark”.

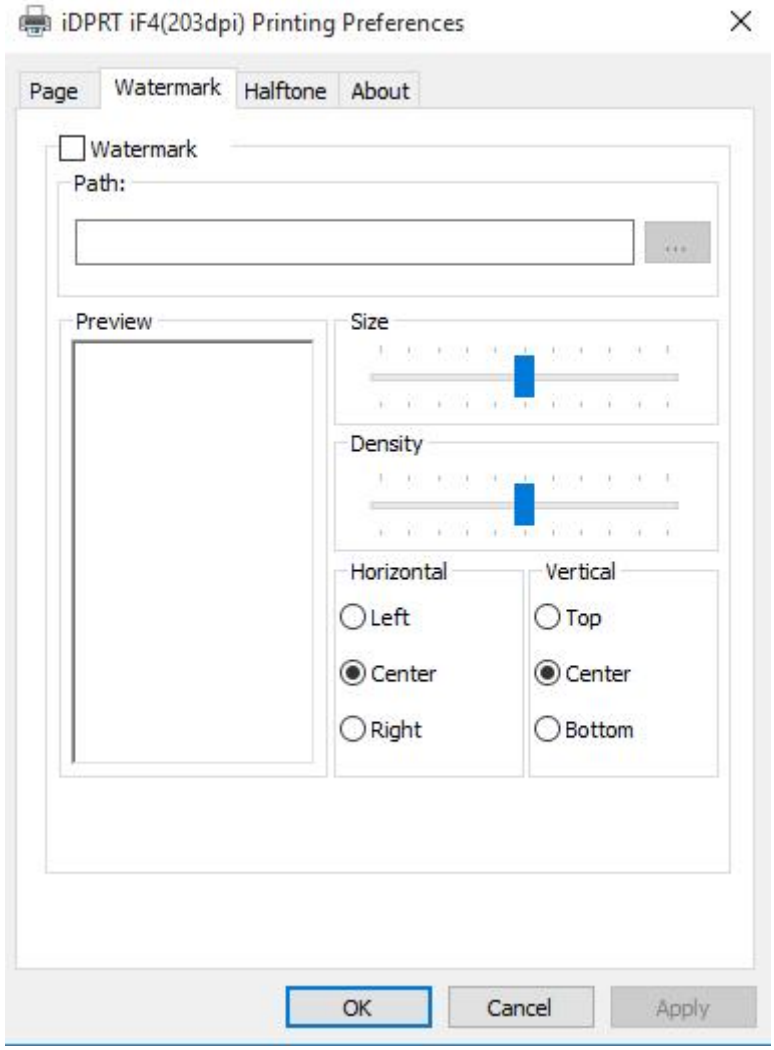

4.Click “Halftone” to set the halftone.

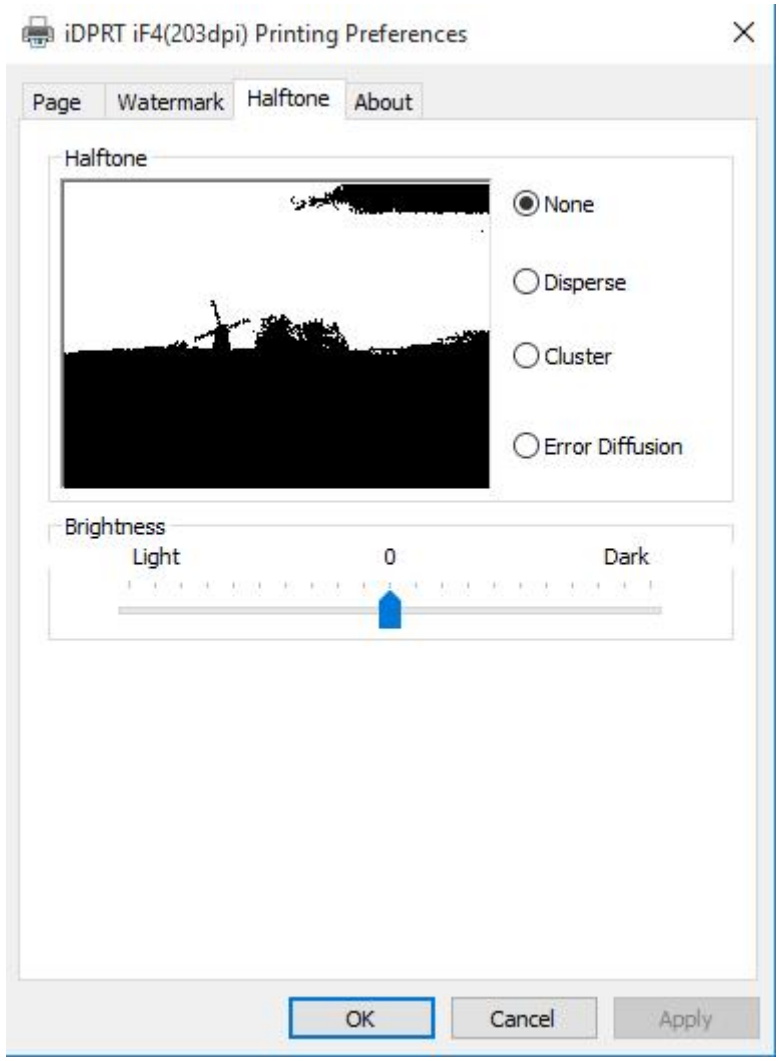

7.4.2 Printer Properties

1. Right click the icon and choose “Printer properties”.

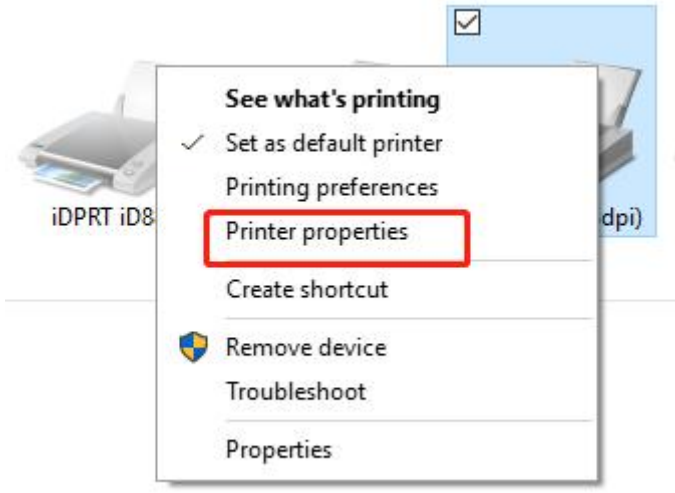

2. Click “General”→“Print Test Page”, and printer will print labels with current settings.

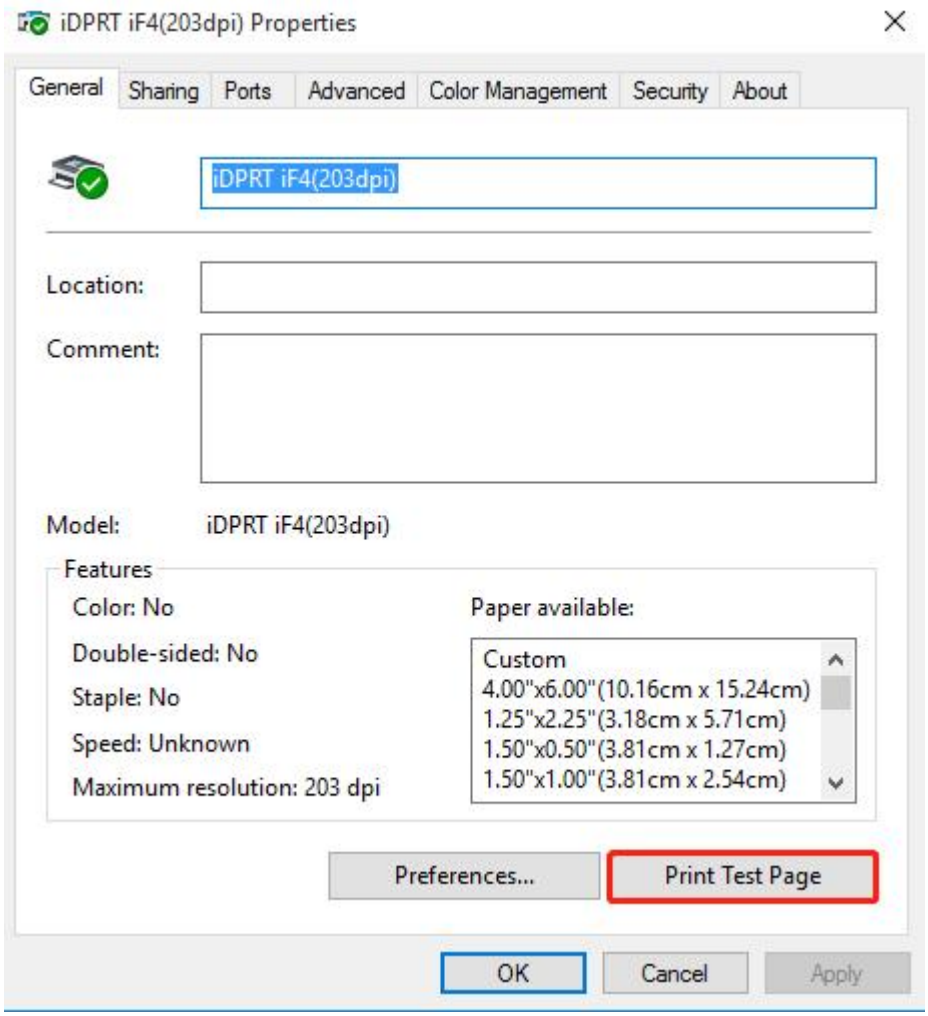

3.Click “Ports”, then choose the port needed.

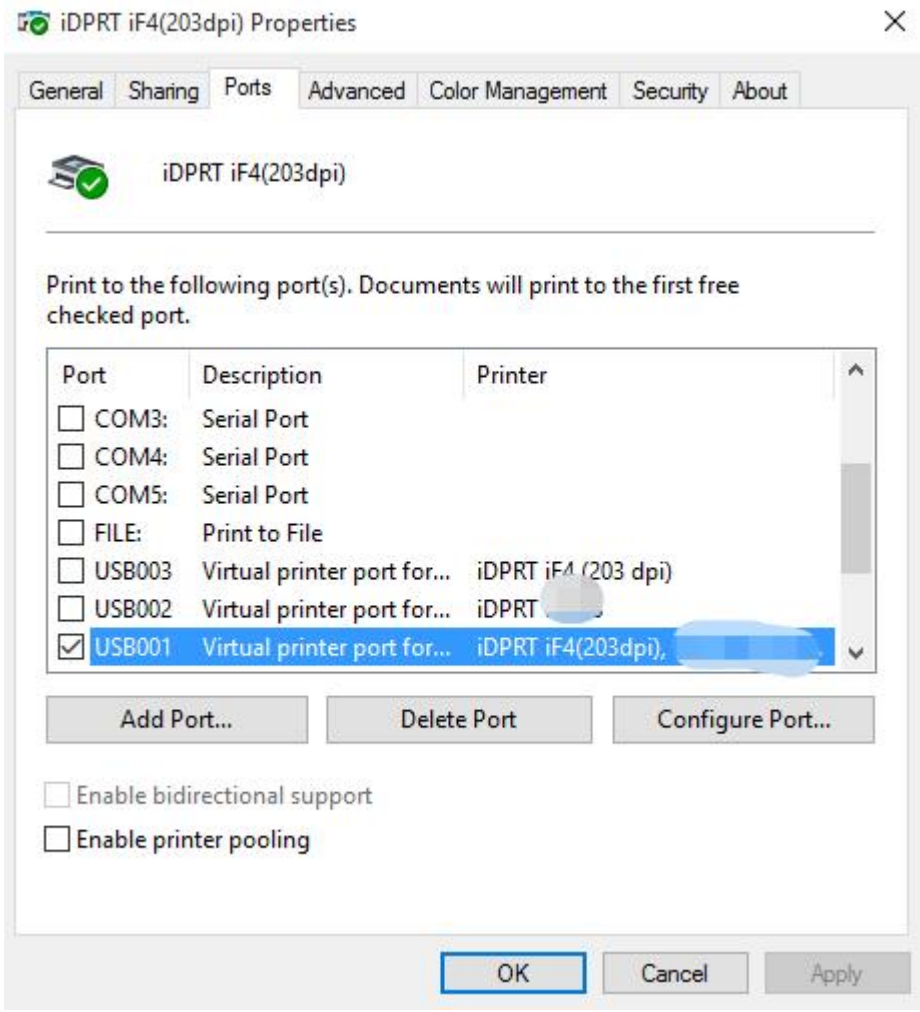

7.5 Uninstall Driver

1.Double click Windows Driver Software.

2.Select the language and click 'OK'.

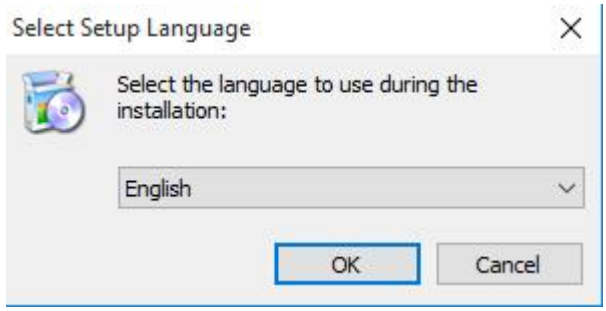

3.Choose “Uninstall printer driver”, then click “Next”.

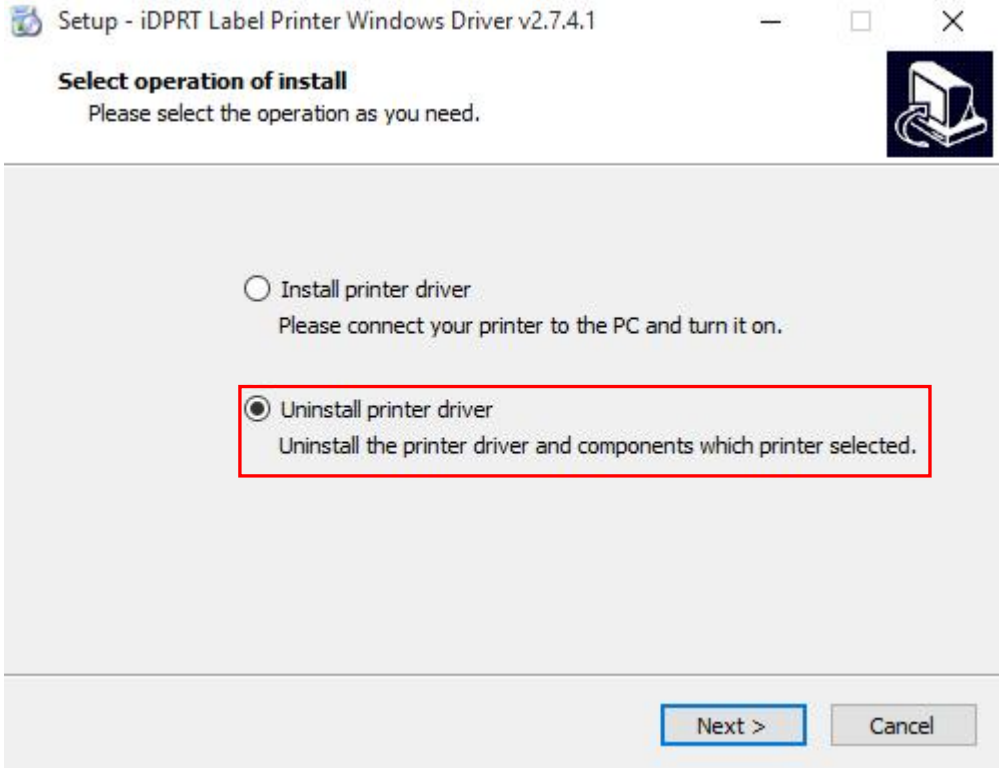

4.Select the driver you want to uninstall and click "Next".

